M-10263 | 1

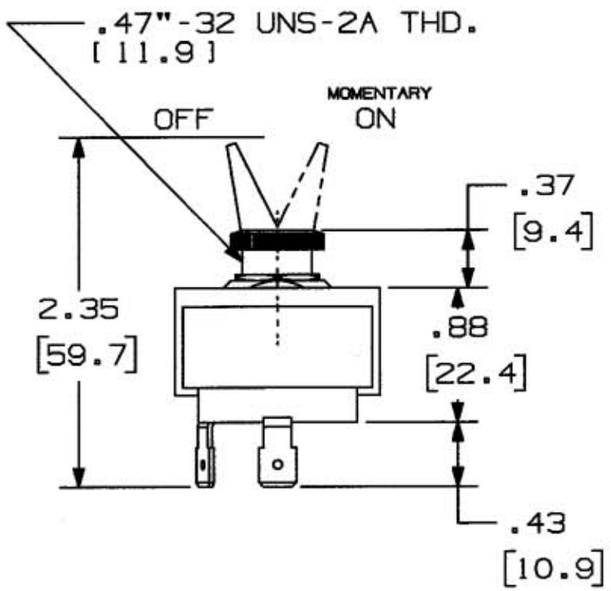

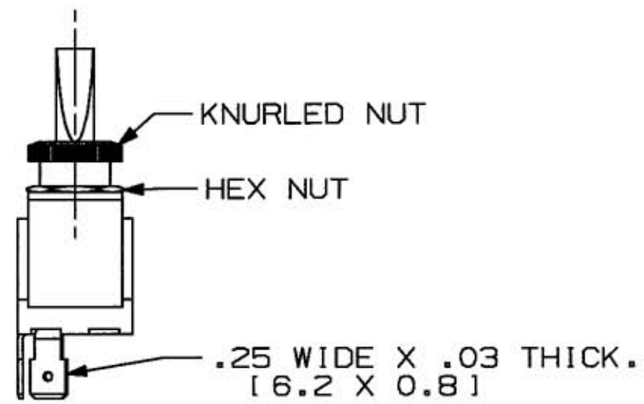

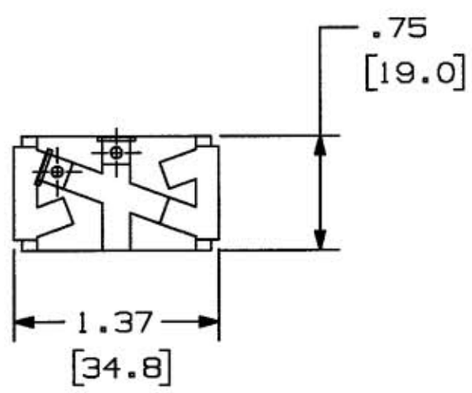

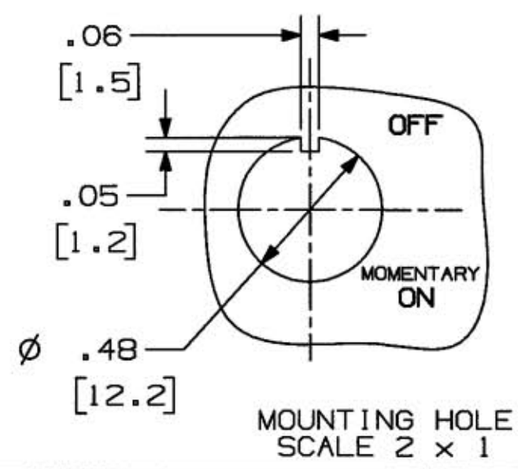

MOUNTING HOLE
SCALE 2 × 1

NOTE
1. DIMENSIONS IN INCHES [MILLIMETERS].
2. SUPPLIED ASSEMBLED WITH:
   (1) .47"-32 THD. KNURLED NUT (BRASS, BLACK OXIDE).
   (1) .47"-32 THD. HEX NUT (BRASS,NICKEL PLATE).

CATALOG NO. M11MSP

CODE 74545

LIST OF PARTS

DESCRIPTION	MATERIAL	FINISH
REF. D53430		

SYM	REVISIONS	APP	DATE
1	RELEASED PER DCN13301 GPK	JPP	10/20/06

THE DESIGN AND DIMENSIONS OF THE PRODUCT SHOWN ON THIS DRAWING ARE SUBJECT TO CHANGE WITHOUT NOTICE

TITLE MARINE SWITCH
SPST MOM. ON / OFF
PLASTIC STEM

TOLERANCES UNLESS OTHERWISE SPECIFIED
FRACTIONS ±1/64
DECIMALS ±.005
ANGLES ±2°

WIRING DEVICE-KELLEMS
HUBBELL INCORPORATED
BRIDGEPORT, CT

DR. BY GPK	APP. BY JPP
TR. BY	SCALE 1=1
CHK'D BY TCM	DATE 10/20/06

DIMENSION SHEET FOR CAT. NO.

REPAIRABLE ☐ NON-REPAIRABLE ☐

B

M-10263

1