M-10599 | 2

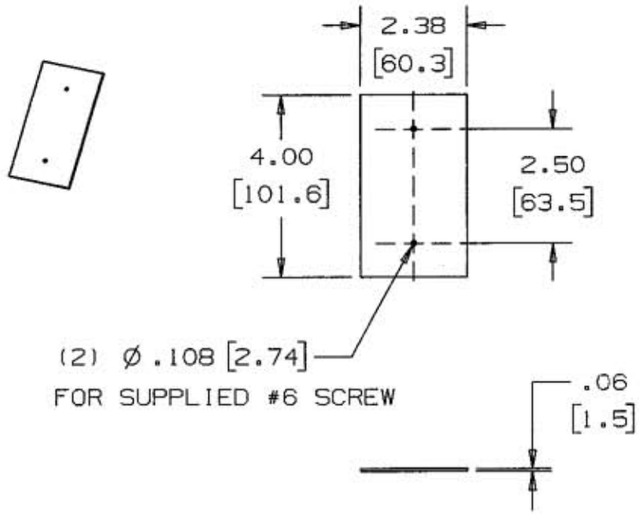

COUPLINGS SUPPLIED	
QTY.	CAT. NO.
6	HBLALU5015
9	HBLALU7615

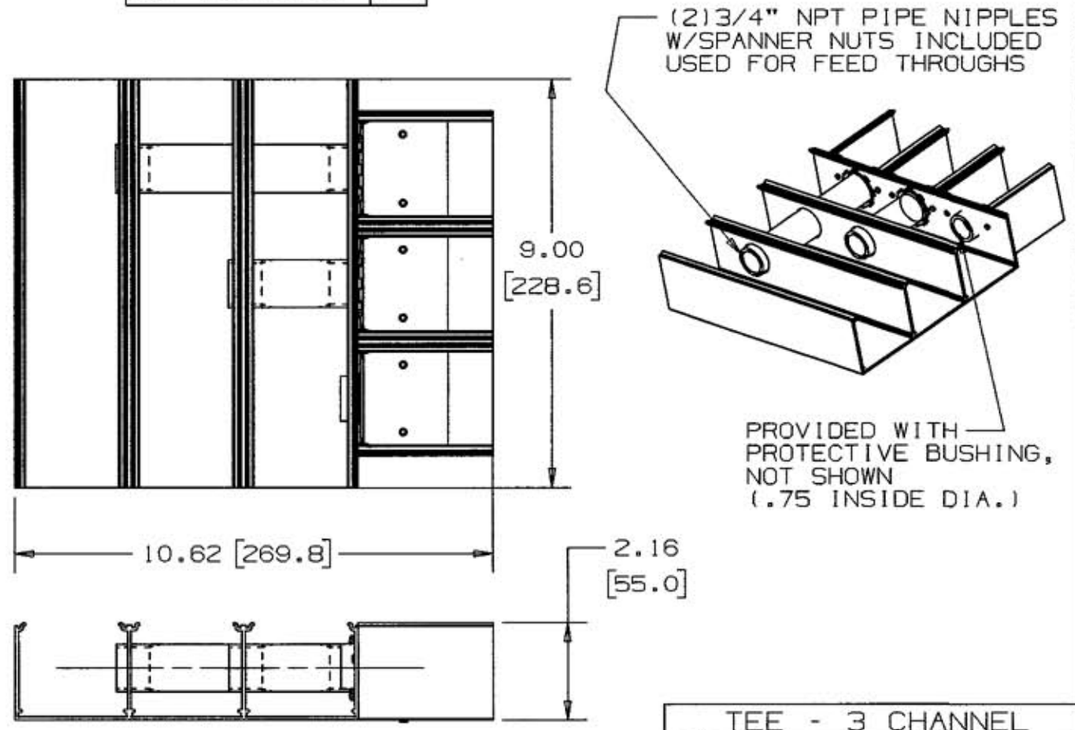

TEE - 3 CHANNEL
CAT. NO. HBLALU7615

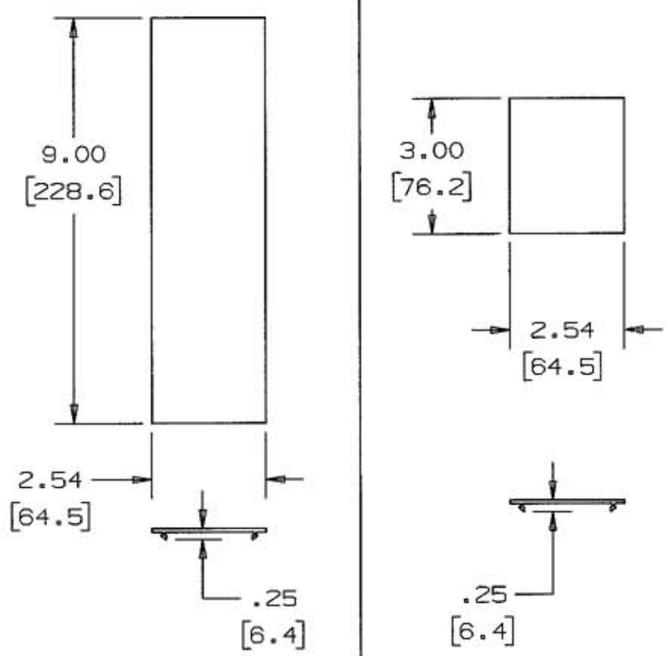

COVERS SUPPLIED		COVERS SUPPLIED	
QTY.	CAT. NO.	QTY.	CAT. NO.
2	HBLALU5015	2	HBLALU5015
3	HBLALU7615	3	HBLALU7615

CODE 74545

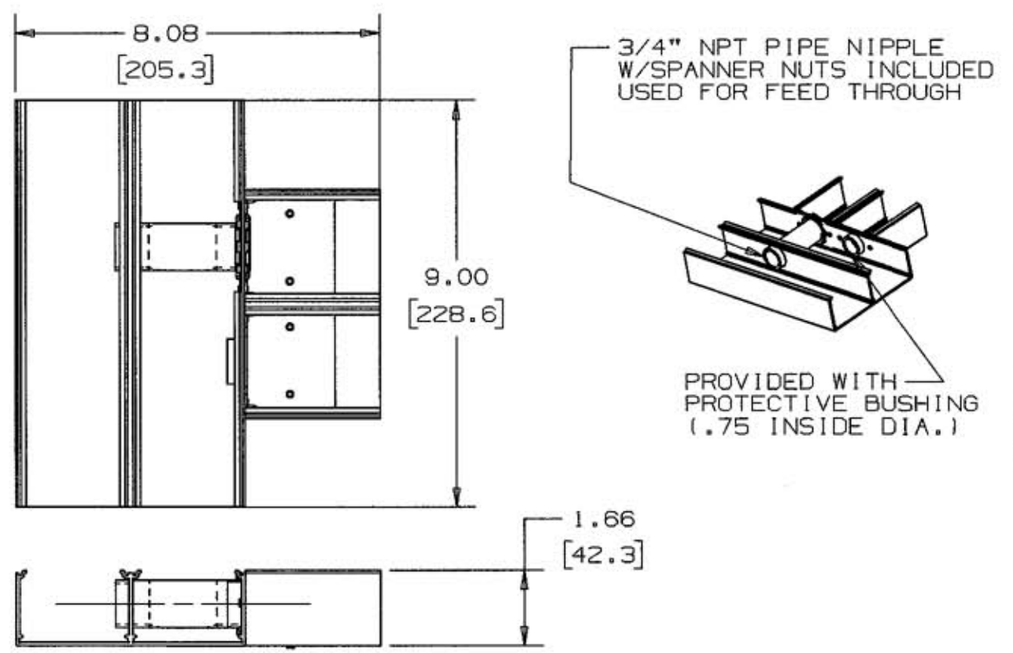

TEE - 2 CHANNEL
CAT. NO. HBLALU5015

NOTE: ALL DIMENSIONS IN INCHES AND [MM]

LIST OF PARTS		
DESCRIPTION	MATERIAL	FINISH
TEE	ALUMINUM	SATIN ANODIZED
TEE COVER	ALUMINUM	SATIN ANODIZED
COUPLING	ALUMINUM	SATIN ANODIZED

SYM	REVISIONS	APP	DATE
2	AT CPLG HOLE WAS .11 DIA FOR #6 SELF TAPPING SCREW DCN14604	SRE	2/11/08
1	RELEASED PER DCN13903	SRE	4/27/07

THE DESIGN AND DIMENSIONS OF THE PRODUCT SHOWN ON THIS DRAWING ARE SUBJECT TO CHANGE WITHOUT NOTICE

TITLE
TEE
ALUMINUM SERIES

TOLERANCES UNLESS OTHERWISE SPECIFIED
FRACTIONS ± 1/64
DECIMALS ± .005
ANGLES ± 2°

WIRING DEVICE-KELLEMS
HUBBELL INCORPORATED
BRIDGEPORT, CT

DR. BY SRE | APP. BY SRE
TR. BY | SCALE 1:1
CHK'D BY SRE | DATE 4/27/07

DIMENSION SHEET FOR CAT. NO.

REPAIRABLE ☐ NON-REPAIRABLE ☒

B

M-10599

2