M-10774 | 1

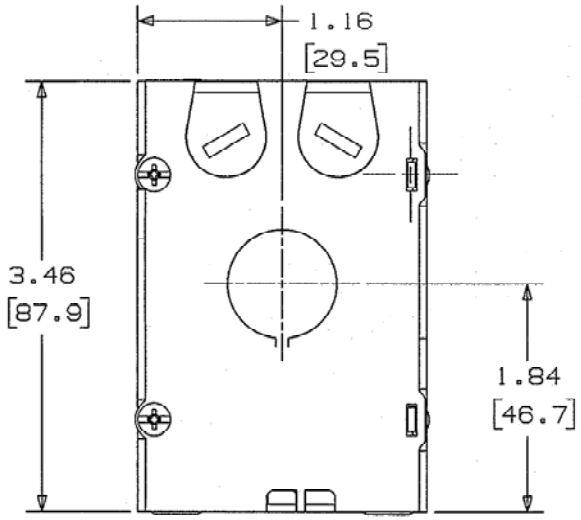

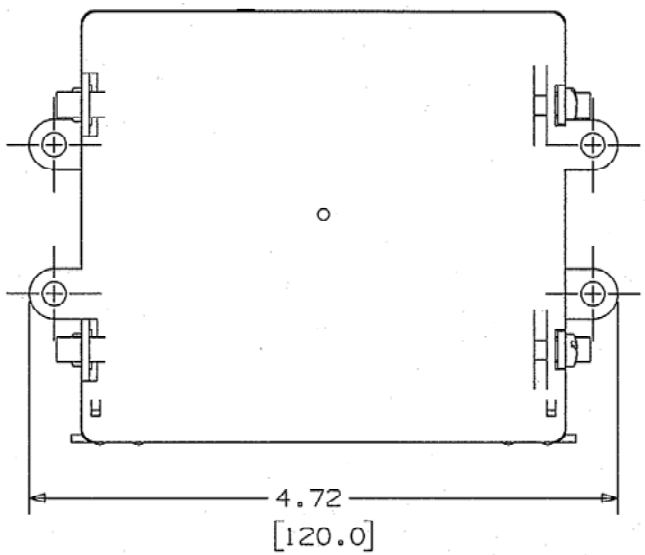

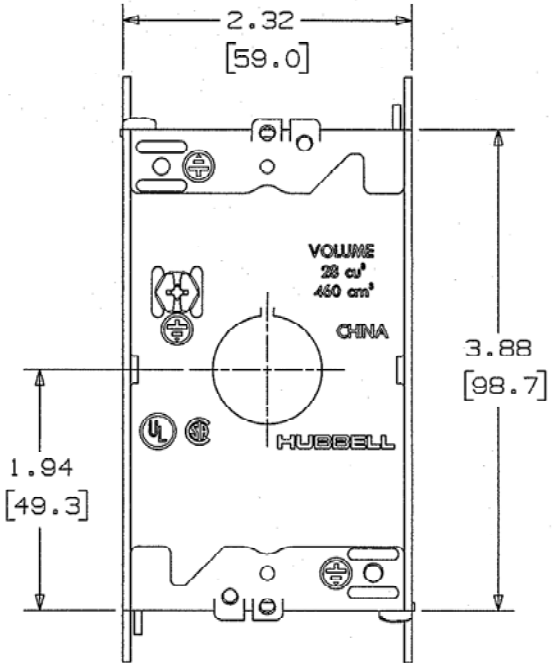

NOTES:
(UNLESS OTHERWISE SPECIFIED)

1. DIMENSIONS ARE IN INCHES [MM]
2. BOX CAPACITY 28.0 CUBIC INCH.

LIST OF PARTS

DESCRIPTION	MATERIAL	FINISH
SIDE WALLS	STEEL	GALVANIZED
WALL BOX BODY	STEEL	GALVANIZED
SCREWS	STEEL	

SYM	REVISIONS	APP	DATE
2	3/24/10 REVISED DRAWING TO SHOW NEW BOX DESIGN PER DCN 16556		3/24/10
1	9/19/07 REVISED AND RELEASED FOR PRODUCTION PER EC 14281		9/19/07

THE DESIGN AND DIMENSIONS OF THE PRODUCT SHOWN ON THIS DRAWING ARE SUBJECT TO CHANGE WITHOUT NOTICE

TITLE
WALL BOX

TOLERANCES UNLESS OTHERWISE SPECIFIED
FRACTIONS ±1/64
DECIMALS ±.005
ANGLES ±2°

HUBBELL WIRING SYSTEMS
BRIDGEPORT, CT.

DR. BY DMP | APP. BY
TR. BY | SCALE NONE
CHK'D BY | DATE 9/19/07

DIMENSION SHEET FOR CAT. NO. RJ600

REPAIRABLE ☒ NON-REPAIRABLE ☐

B

M-10774

2

CODE 74545