M-11130 | 1

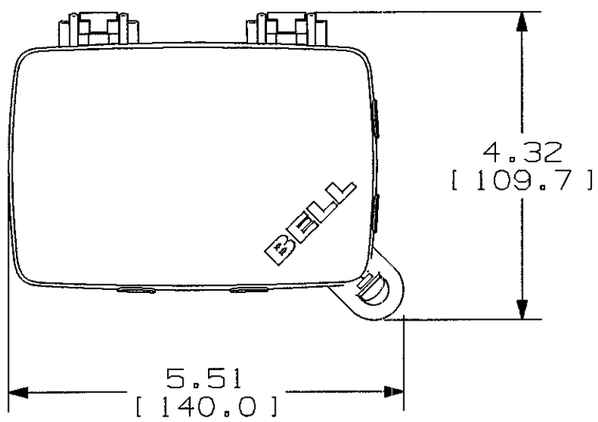

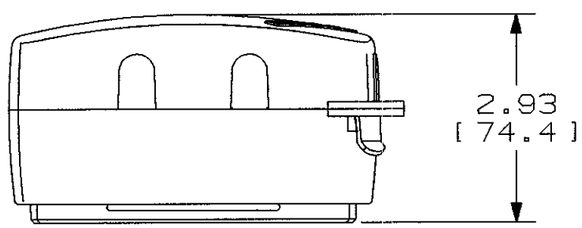

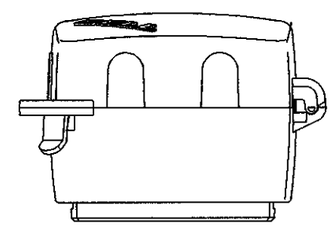

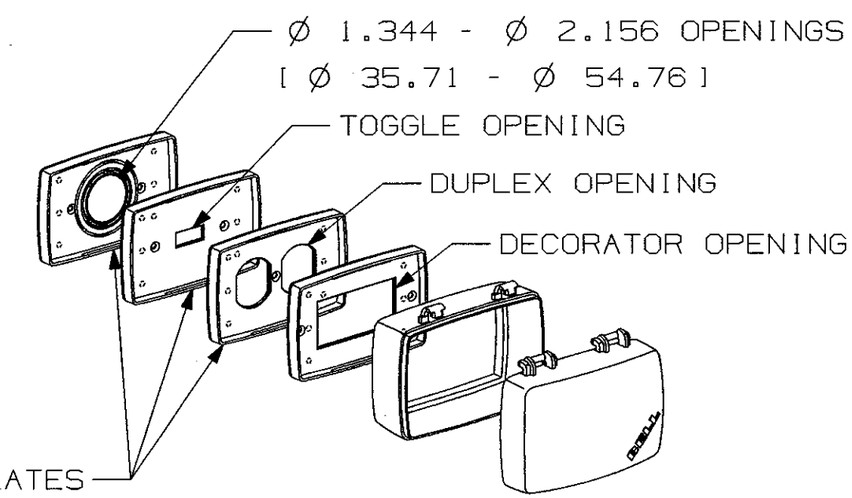

NOTES:
1. GASKET AND (4) MOUNTING SCREWS INCLUDED.
2. MOUNTED HORIZONTALLY.
3. DIMENSIONS ARE IN INCHES [MM].

LIST OF PARTS

DESCRIPTION	MATERIAL	FINISH
COVER	POLYCARB	CLEAR
BACK	POLYCARB	GRAY
PLATES	POLYCARB	GRAY
GASKET	FOAM	BLACK
SCREW	STEEL	

SYM	REVISIONS	APP	DATE
1	"X" REMOVED; LAST "X" REV. WAS "X-0" PER DCN #15134 RCM	DJP	9/10/08

THE DESIGN AND DIMENSIONS OF THE PRODUCT SHOWN ON THIS DRAWING ARE SUBJECT TO CHANGE WITHOUT NOTICE

TITLE
WEATHER RESISTANT
COVER, IN-USE, 1-GANG

TOLERANCES UNLESS OTHERWISE SPECIFIED
FRACTIONS ± 1/64
DECIMALS ± .005
ANGLES ± 2°

WIRING DEVICE-KELLEMS
HUBBELL INCORPORATED
BRIDGEPORT, CT

DR. BY RCM	APP. BY DJP
TR. BY	SCALE NONE
CHK'D BY DJP	DATE 9/10/08

DIMENSION SHEET FOR CAT. NO. RW57400

REPAIRABLE ☐ NON-REPAIRABLE ☒

B

M-11130

1

CODE 74545