M11273 | 1

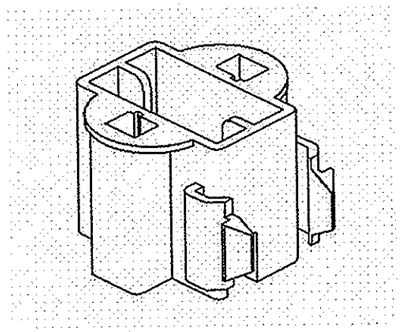

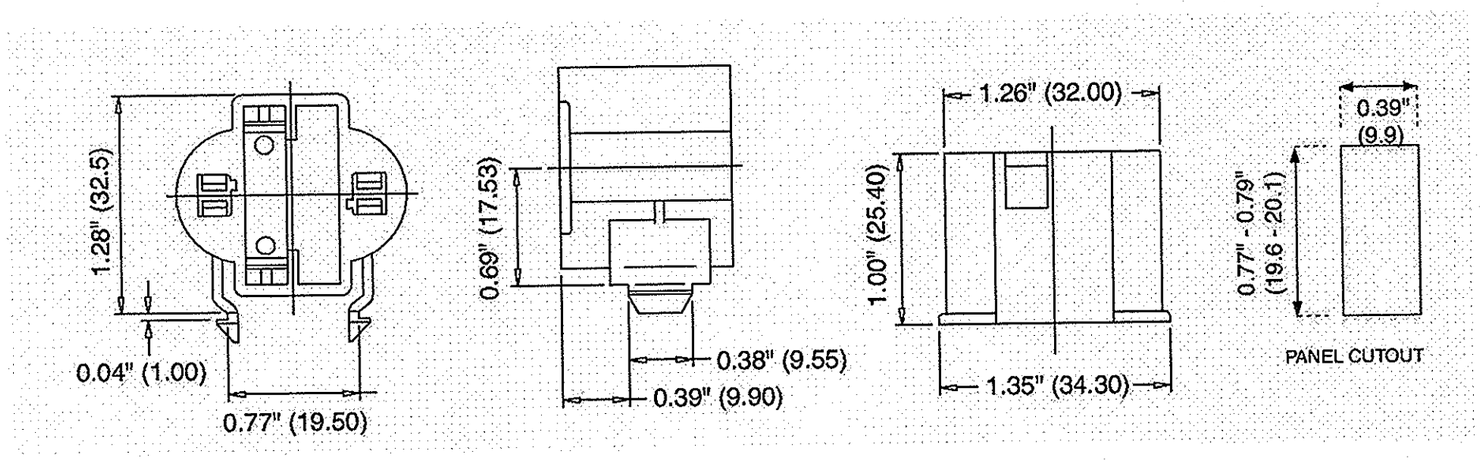


NOTES:

1. DIMENSIONS ARE INCHES [ mm ].
2. QUICK CONNECT PUSH-IN WIRE TERMINALS FOR 18 AWG SOLID OR TWIST & TIN, STRIPPED 7/16". MAXIMUM 6.5 LBS. CONDUCTOR INSERTION FORCE.
3. SNAP-IN MOUNT INTO 0.63 - 1.01mm [ 0.025-0.040" ] PANEL THICKNESS. EACH WIRING PORT ACCEPTS 2 WIRES FOR EASY HARNESS WIRING, NO EXTRA JUMPERS OR WIRE NUTS TO ASSEMBLE.
4. c UL US LISTED; c CSA US APPROVED. RATED 75W MAX, 600V MAX.
5. PACKAGING: SEALED IN POLYBAG.
6. DIMENSIONAL TOLERANCE ±0.05", ±0.010"

LIST OF PARTS

| DESCRIPTION | MATERIAL | FINISH |
|---|---|---|
| BASE | PLASTIC | WHITE |

| SYM | REVISIONS | APP | DATE |
|---|---|---|---|
| 1 | 12/01/09 RELEASE TO PRODUCTION PER DCN 16198 | CAC | |

THE DESIGN AND DIMENSIONS OF THE PRODUCT SHOWN ON THIS DRAWING ARE SUBJECT TO CHANGE WITHOUT NOTICE

TITLE COMPACT FLUORESCENT LAMPHOLDER, 13W G23X, HORZ, SNAP IN MNT

TOLERANCES UNLESS OTHERWISE SPECIFIED
FRACTIONS ±1/64
DECIMALS ±.005
ANGLES ±2°

WIRING DEVICE-KELLEMS
HUBBELL INCORPORATED
BRIDGEPORT, CT

| | |
|---|---|
| DR. BY DLI | APP. BY CAC |
| TR. BY | SCALE NONE |
| CHK'D BY | DATE 04/01/09 |

DIMENSION SHEET FOR CAT. NO. RL413HSI

REPAIRABLE ☐ NON-REPAIRABLE ☒

B

M11273

1

CODE 74545