M11291 | 1

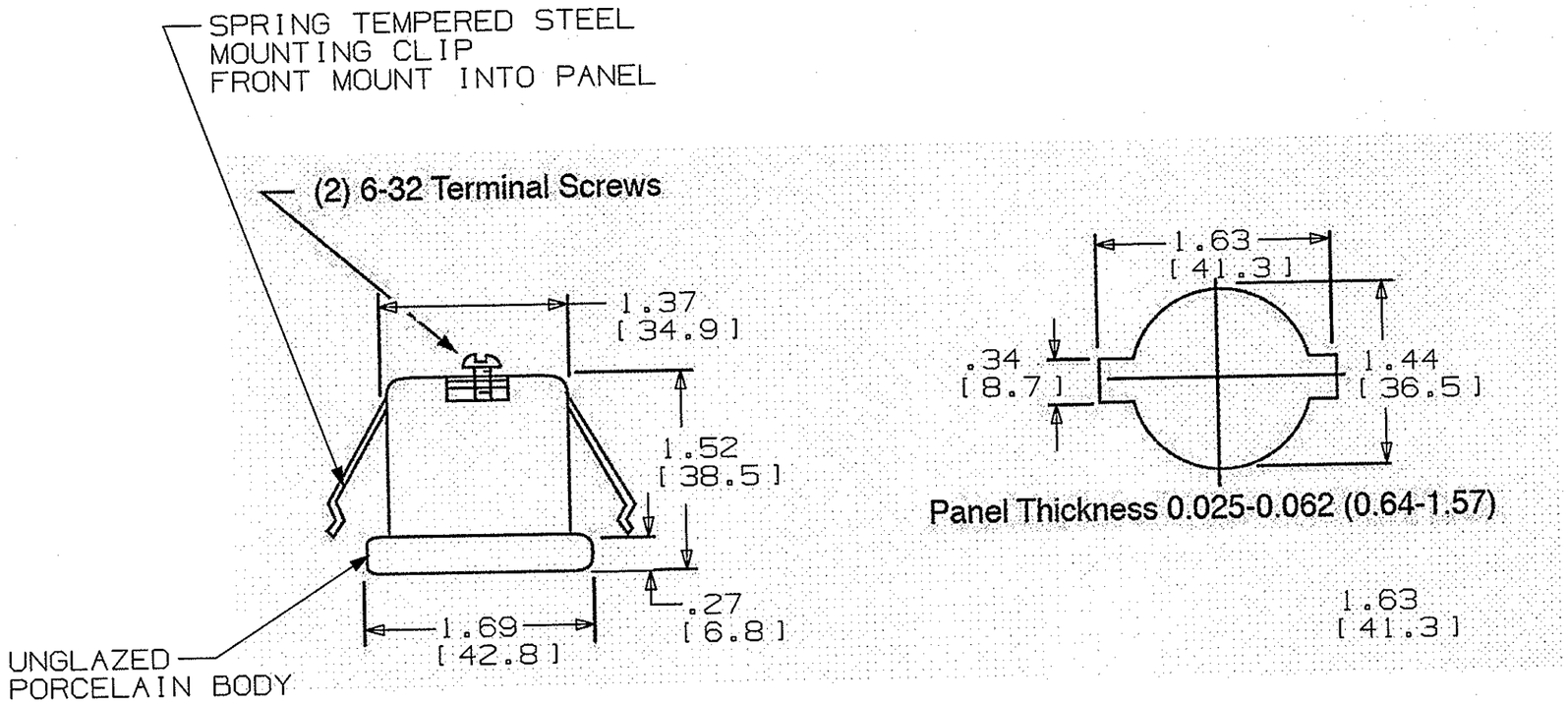

NOTES:

1. DIMENSIONS ARE INCHES [mm].
2. SCREW SHELL COMPLIES TO MEDIUM BASE LAMPHOLDER ANSI-C81.10 STD2-11-1 AND IEC E26.
3. ACCOMMODATE .025-.062 IN.[.63-1.57mm] PANEL THICKNESS.
4. UL LISTED; CSA CERTIFIED. RATED 660W MAX., 250V MAX.
5. PACKAGING: PRODUCT PLACED IN BOX.

LIST OF PARTS

DESCRIPTION	MATERIAL	FINISH
BODY	PORCELAIN	WHITE
SCREW SHELL	ALUM	

DIMENSION SHEET FOR CAT. NO. RL158

REPAIRABLE ☐ NON-REPAIRABLE ☒

SYM	REVISIONS	APP	DATE
1	12/01/09 RELEASE TO PRODUCTION PER DCN 16198	CAC	

THE DESIGN AND DIMENSIONS OF THE PRODUCT SHOWN ON THIS DRAWING ARE SUBJECT TO CHANGE WITHOUT NOTICE

TITLE
INCANDESCENT SOCKET
MEDIUM BASE LOW PRF
FRNT MT SNP

TOLERANCES UNLESS OTHERWISE SPECIFIED
FRACTIONS ±1/64
DECIMALS ±.005
ANGLES ±2°

WIRING DEVICE-KELLEMS
HUBBELL INCORPORATED
BRIDGEPORT, CT

DR. BY DLI	APP. BY
TR. BY	SCALE NONE
CHK'D BY	DATE 04/01/09

B

M11291

1

CODE 74545