M11301 | 1

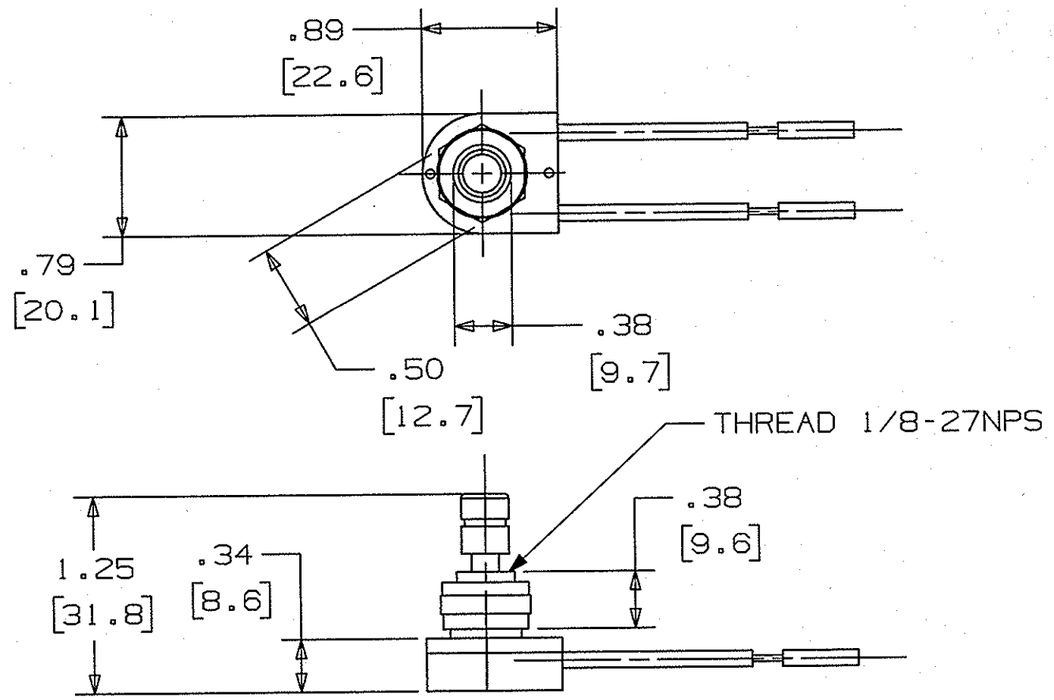

NOTES:

1. DIMENSIONS ARE INCHES [mm].
2. POLES/THROW: SPST.
3. CIRCUIT ARRANGEMENT: ON-OFF.
4. NIPPLE MATERIAL: POLYCARBONATE, NIPPLE LENGTH: 0.38" [9.3].
5. LEADS ARE 18 AWG AWM/TEW 105°C 600V, 6" LENGTH; STRIPPED 1/2".
6. UL RECOGNIZED; CSA APPROVED.
7. RATING: 3A, 250VAC, 3A 125V "L"
   6A, 125VAC
   DIELECTRIC STRENGTH: 1000V Meg (Minimum)
   INSULATION RESISTANCE: 100 Meg Ohms
8. PACKAGING: SEALED IN POLYBAG

LIST OF PARTS

DESCRIPTION	MATERIAL	FINISH
BASE	PHENOLIC	BLACK

SYM	REVISIONS	APP	DATE
1	12/01/09 RELEASE TO PRODUCTION PER DCN 16198	CAC CAC	

THE DESIGN AND DIMENSIONS OF THE PRODUCT SHOWN ON THIS DRAWING ARE SUBJECT TO CHANGE WITHOUT NOTICE

TITLE SPECIAL USE SWITCH
ROTARY, ON-OFF
SPST, PHEN KNOB

TOLERANCES UNLESS OTHERWISE SPECIFIED
FRACTIONS ±1/64
DECIMALS ±.005
ANGLES ±2°

WIRING DEVICE-KELLEMS
HUBBELL INCORPORATED
BRIDGEPORT, CT

DR. BY CAC	APP. BY CAC
TR. BY	SCALE NONE
CHK'D BY	DATE 04/01/09

DIMENSION SHEET FOR CAT. NO. RL125

REPAIRABLE ☐ NON-REPAIRABLE ☒

B

M11301

1

CODE 74545