M-11436 | 2

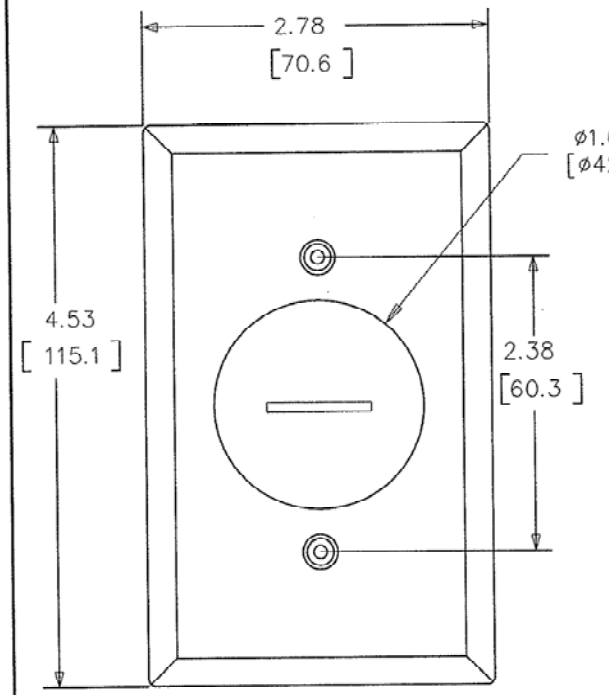

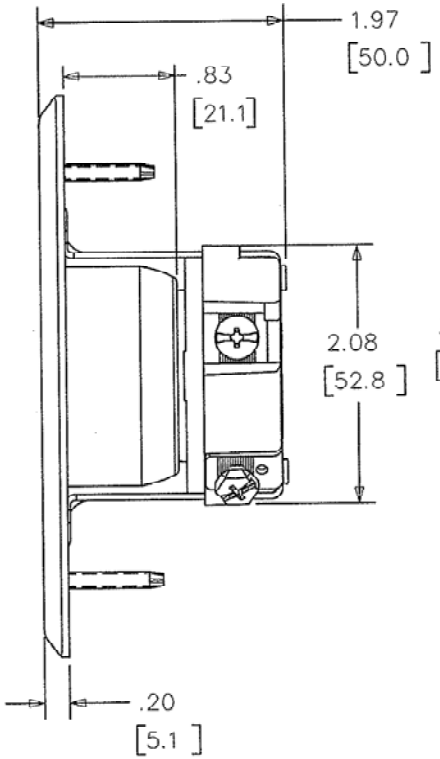

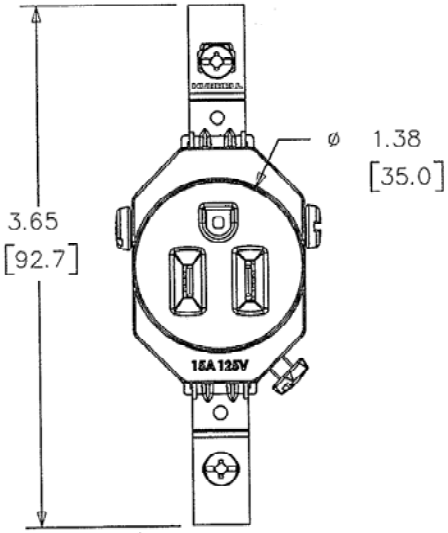

CATALOG NO.	CONFIG	FINISH
RF151D	15A–125VAC	BRASS COVER NON TAMPER RESISTANT RECEPTACLE
RF151DTR	TR 15A–125VAC	BRASS COVER TAMPER RESISTANT RECEPTACLE

NOTES: (UNLESS OTHERWISE SPECIFIED)
1. DRAWING IS IN INCHES [MM].
2. MOUNTING SCREWS (2) PROVIDED.

LIST OF PARTS

DESCRIPTION	MATERIAL	FINISH
WALL PLATE W/COVER	BRASS	
WALL PL. MTG. SCREWS	BRASS	
DRIVE SCREWS	STEEL	ZINC PLATE
GROUND STRAP	STEEL	ZINC PLATE
TERMINALS	BRASS	
RECEPT. MOUNTING SCREWS	STEEL	ZINC PLATE
BASE AND COVER	PLASTIC	

DIMENSION SHEET FOR CAT. NO. SEE TABLE

REPAIRABLE ☒ NON-REPAIRABLE ☐

SYM	REVISIONS	APP	DATE
2	TABLE, REVISED FINISH. REVISED LIST OF PARTS. PER DCN 16577	CZH	5/3/10
1	NEW RELEASE PER DCN 16131 SPN	CZH	12/2/09

THE DESIGN AND DIMENSIONS OF THE PRODUCT SHOWN ON THIS DRAWING ARE SUBJECT TO CHANGE WITHOUT NOTICE

TITLE
SINGLE DISPLAY
RECESSED RECEPTACLE

TOLERANCES UNLESS OTHERWISE SPECIFIED
FRACTIONS ±1/64
DECIMALS ±.005
ANGLES ±2°

WIRING DEVICE-KELLEMS
HUBBELL INCORPORATED
BRIDGEPORT, CT

DR. BY SPN	APP. BY CZH
TR. BY	SCALE NONE
CHK'D BY CZH	DATE 12/2/09

B M-11436 2

CODE 74545