M115141

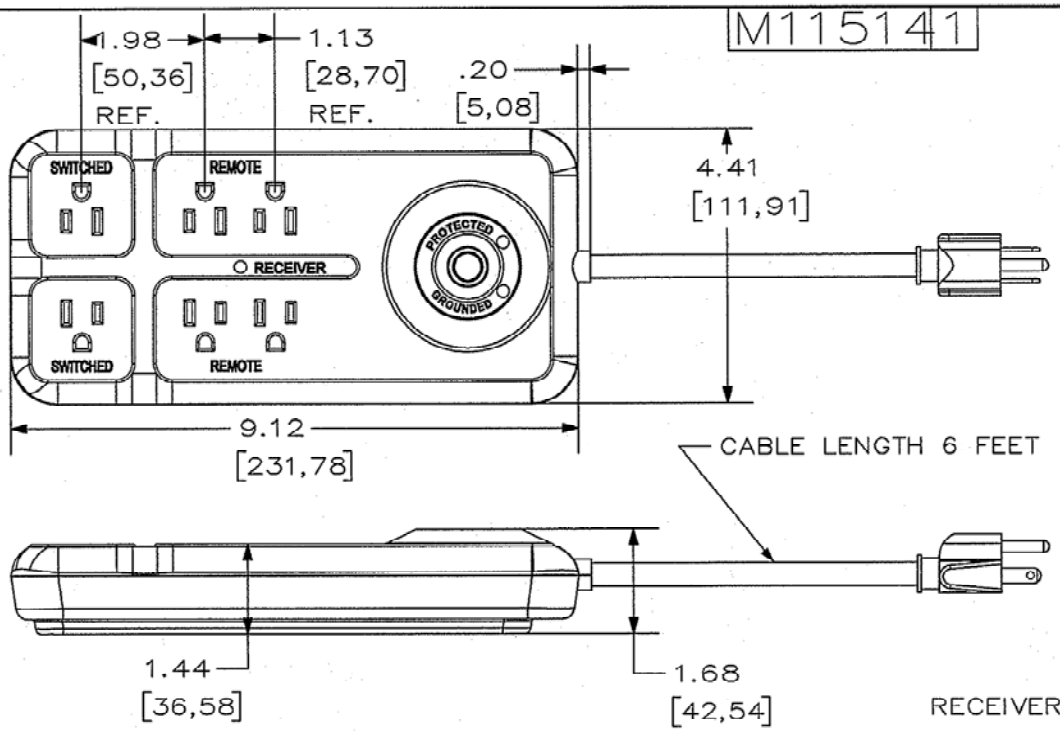

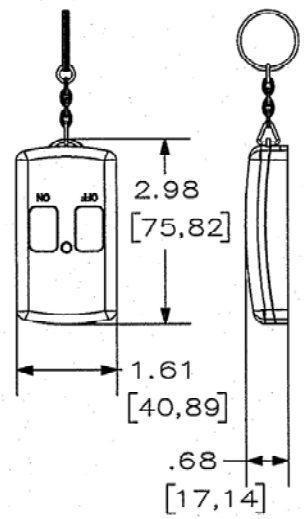

NOTES: (UNLESS OTHERWISE SPECIFIED)
1) ALL DIMENSIONS ARE IN INCHES [mm].
2) UL/c UL LISTED.
3) ELECTRICAL RATINGS: 15A, 125V, 1875W.
4) JOULE RATING: 2,100 J.
5) UL VOLTAGE PROTECTION LEVEL: 400V. (L–N)
6) Inom. : 6kV, 3kA.
7) RESPONESE TIME: FASTER THAN 1 NANOSECOND
8) EMI / RFI NOISE REJECTION: UP TO 20DB FROM 150KHz TO 30MHz.
9) RECEIVER:
MAX. LOAD: 10AMPS, 1250 WATTS RESISTIVE LOAD
5A, 625W TUNGSTUN LOAD.
10) TRANSMITTER:
RANGE: UP TO 80 FEET/24.2M;
BATTERY: 12 VOLTS (INCLUDED)

CODE 74545

LIST OF PARTS

DESCRIPTION	MATERIAL	FINISH
RECEIVER	PLASTIC	WHITE
TRANSMITTER	PLASTIC	WHITE

DIMENSION SHEET FOR CAT. NO. HBL6RSPS2100

REPAIRABLE ☐ NON-REPAIRABLE ☒

SYM	REVISIONS	APP	DATE
1	01/12/10 RELEASE TO PRODUCTION PER DCN 16208 DLI SL	SL	3-10-10

B

THE DESIGN AND DIMENSIONS OF THE PRODUCT SHOWN ON THIS DRAWING ARE SUBJECT TO CHANGE WITHOUT NOTICE

TITLE
SPD WITH REMOTE CONTROL SYSTEM

TOLERANCES UNLESS OTHERWISE SPECIFIED
FRACTIONS ±1/64
DECIMALS ±.005
ANGLES ±2°

WIRING DEVICE–KELLEMS
HUBBELL INCORPORATED
BRIDGEPORT, CT

DR. BY DLI | APP. BY SL
TR. BY | SCALE 1:2
CHK'D BY SL | DATE 01/12/10

M115141

1