M115171

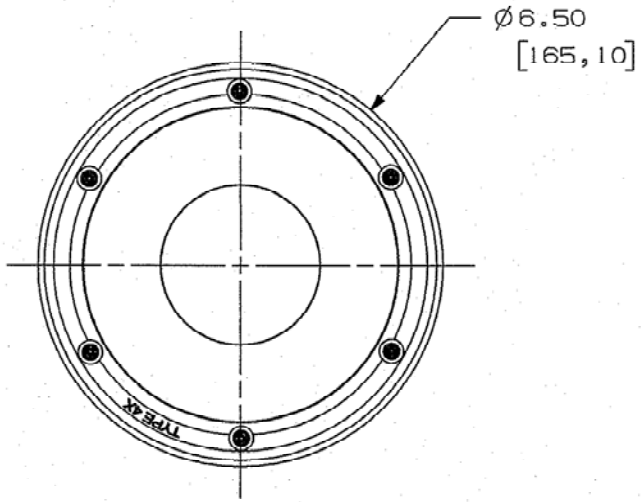

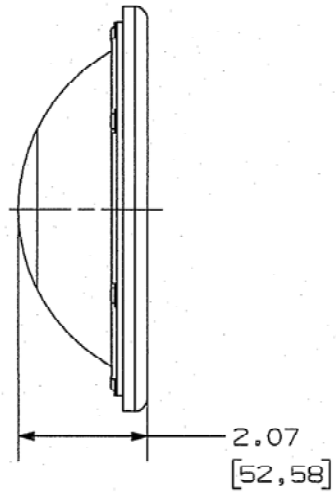

NOTES: (UNLESS OTHERWISE SPECIFIED)
1) DIMENSIONS ARE IN INCHES [mm].

LIST OF PARTS

DESCRIPTION	MATERIAL	FINISH
BASE	PLASTIC	WHITE

SYM	REVISIONS	APP	DATE
1	01/12/10 RELEASE TO PRODUCTION PER DCN 16274 DLI		2/26/10

THE DESIGN AND DIMENSIONS OF THE PRODUCT SHOWN ON THIS DRAWING ARE SUBJECT TO CHANGE WITHOUT NOTICE

TITLE
CEILING SENSOR INFRARED PROTECTIVE ENCLOSURE

TOLERANCES UNLESS OTHERWISE SPECIFIED
FRACTIONS ±1/64
DECIMALS ±.005
ANGLES ±2°

WIRING DEVICE-KELLEMS
HUBBELL INCORPORATED
BRIDGEPORT, CT

DR. BY DLI | APP. BY
TR. BY | SCALE 1:2
CHK'D BY | DATE 01/12/10

DIMENSION SHEET FOR CAT. NO. ACIPE

REPAIRABLE ☐ NON-REPAIRABLE ☒

B

M115171

1

CODE 74545