M-11523 | 1

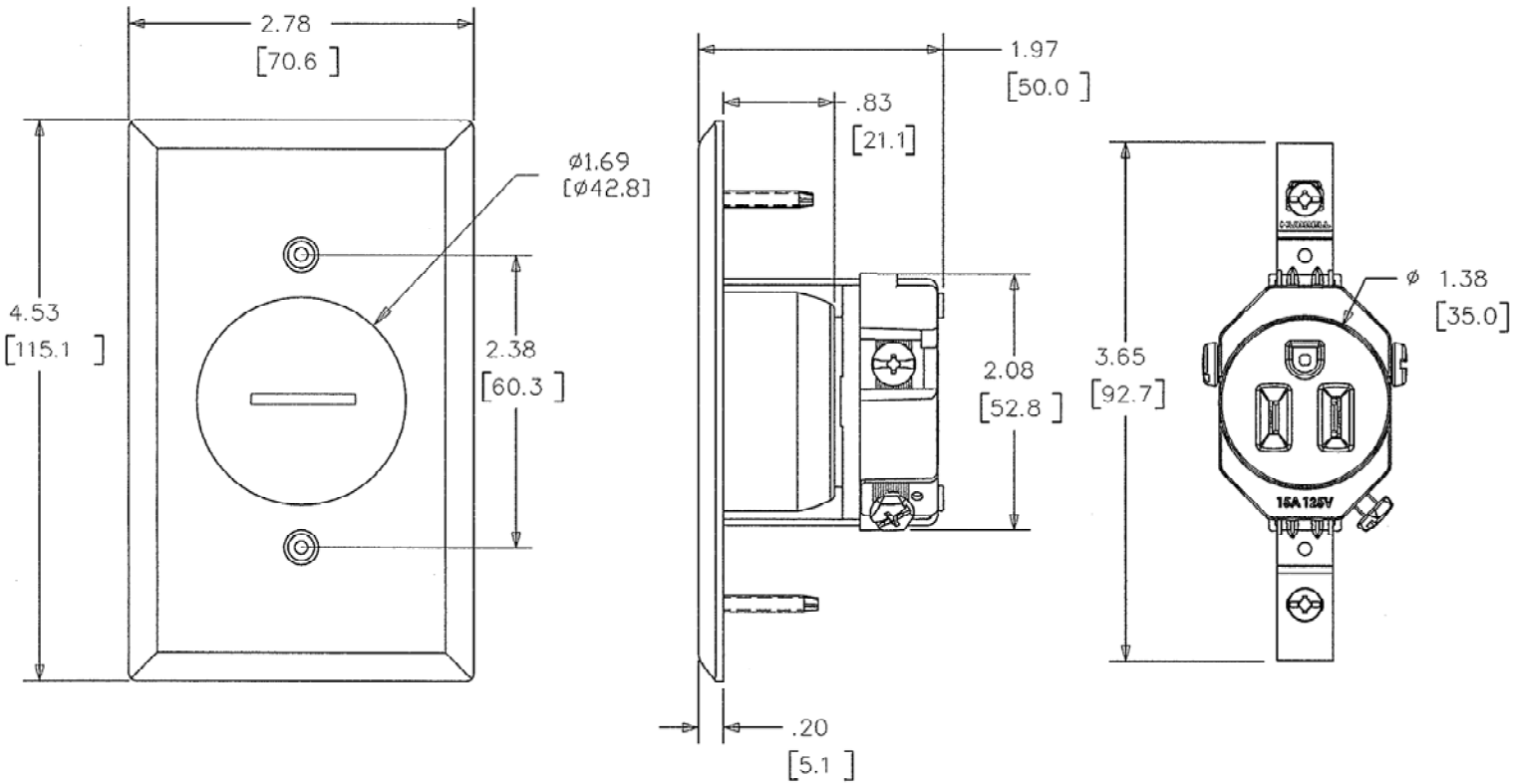

NOTES: (UNLESS OTHERWISE SPECIFIED)

1. DRAWING IS IN INCHES [MM].
2. MOUNTING SCREWS (2) PROVIDED.

LIST OF PARTS

DESCRIPTION	MATERIAL	FINISH
WALL PLATE W/COVER	BRASS	
WALL PLATE MTG SCREWS	BRASS	
DRIVE SCREWS	STEEL	ZINC PLATE
GROUND STRAP	STEEL	ZINC PLATE
TERMINALS	BRASS	
RECEPT. MOUNTING SCREWS	STEEL	ZINC PLATE
BASE AND COVER	PLASTIC	

DIMENSION SHEET FOR CAT. NO. SEE TITLE

REPAIRABLE ☒ NON-REPAIRABLE ☐

SYM	REVISIONS	APP	DATE
1	NEW RELEASE PER DCN 16577 SPN	CZH	5/3/10

THE DESIGN AND DIMENSIONS OF THE PRODUCT SHOWN ON THIS DRAWING ARE SUBJECT TO CHANGE WITHOUT NOTICE

TITLE HBL5236, 15A 125V SINGLE DISPLAY RECESSED RECEPTACLE

TOLERANCES UNLESS OTHERWISE SPECIFIED
FRACTIONS ±1/64
DECIMALS ±.005
ANGLES ±2°

WIRING DEVICE-KELLEMS
HUBBELL INCORPORATED
BRIDGEPORT, CT

DR. BY SPN	APP. BY CZH
TR. BY	SCALE NONE
CHK'D BY CZH	DATE 5/3/10

B M-11523 1

CODE 74545