M-11555 | 1

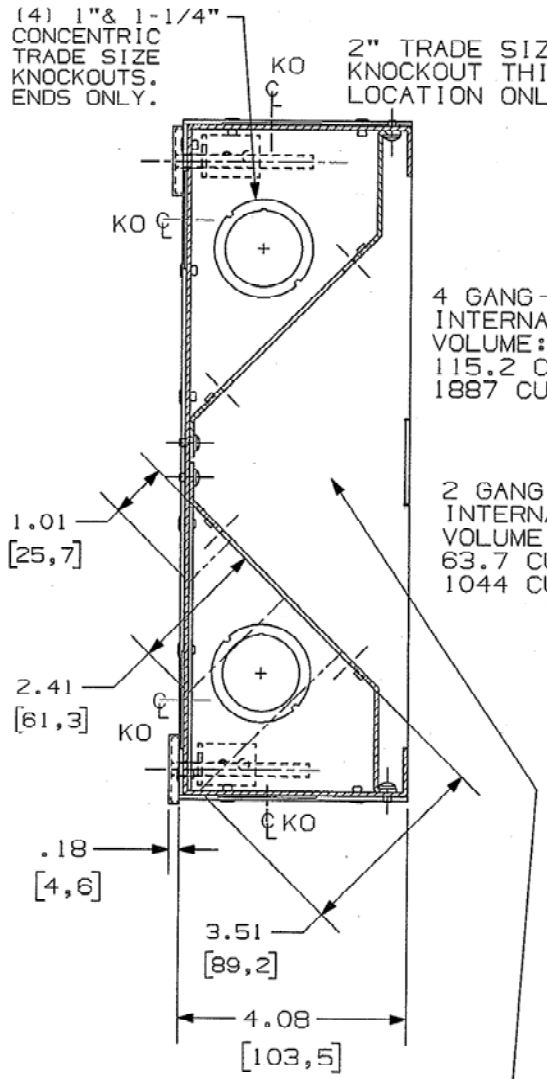

SECTION A-A

CABLE SERVICE AREA INTERNAL VOLUME: 214.9 CU IN, 3522 CUBIC CM

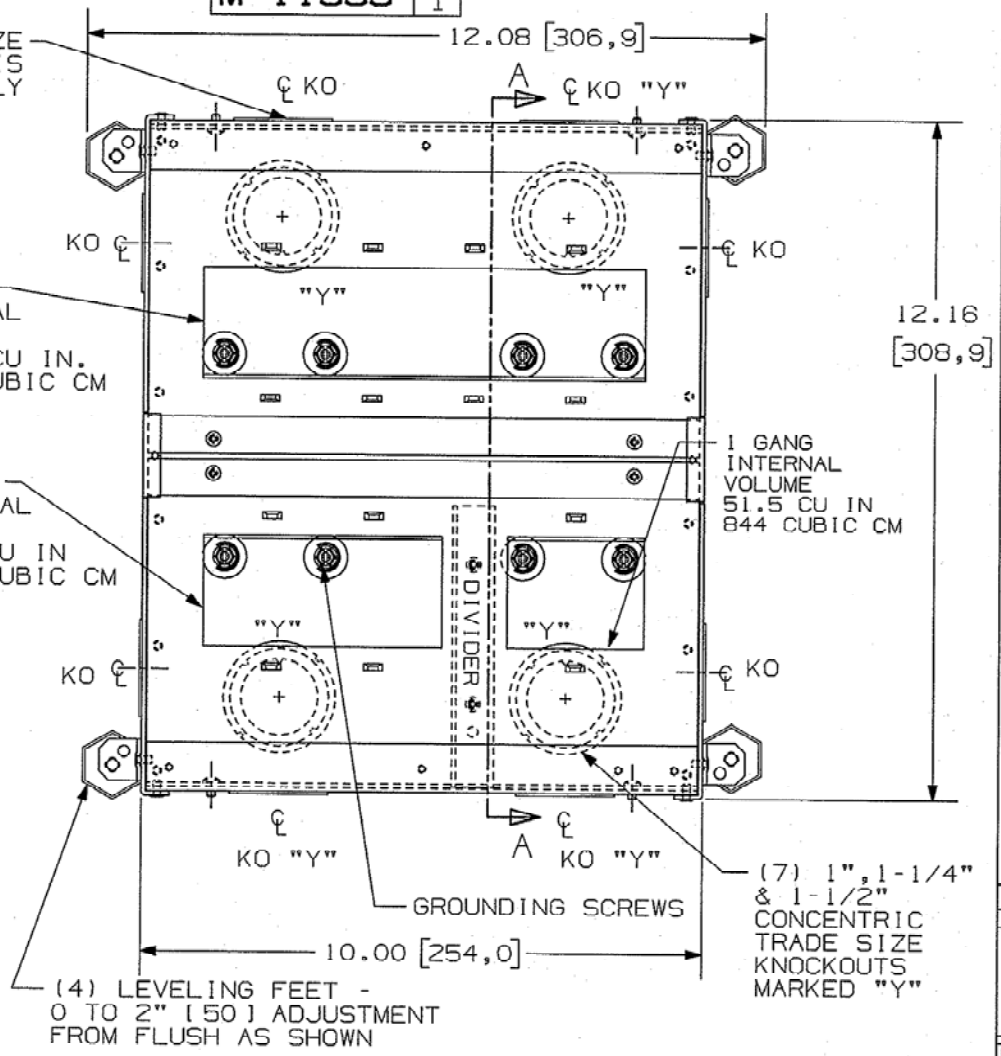

NOTES:
1) KNOCK OUTS (KO'S) ARE SYMMETRICAL ABOUT THE BOX
2) ACCEPTS STANDARD SIZE WALL PLATES - 1,2, & 4 GANG. SOLD SEPARATELY.
3) TEMPORARY COVER NOT SHOWN. .12 [3.0] THK. X 10.5 [266.7] X 12.5 [315.5]
4) ALL DIMENSIONS ARE IN INCHES AND [MILLIMETERS]
5) DIVIDER IS REMOVABLE.

LIST OF PARTS

DESCRIPTION	MATERIAL	FINISH
FLOOR BOX	STEEL	ZINC
DIVIDER	STEEL	ZINC
MOUNTING BRACKETS	STEEL	ZINC
LEVELING FEET	STEEL	ZINC
TEMPORARY COVER(NOT SHOWN)	STEEL	ZINC
FASTENERS	STEEL	ZINC

SYM	REVISIONS	APP	DATE
1	RELEASED PER DCN16595		3/9/10

THE DESIGN AND DIMENSIONS OF THE PRODUCT SHOWN ON THIS DRAWING ARE SUBJECT TO CHANGE WITHOUT NOTICE

TITLE
RECESSED FLOOR BOX
4 IN DEEP, 7 GANG

TOLERANCES UNLESS OTHERWISE SPECIFIED
FRACTIONS ±1/64
DECIMALS ±.005
ANGLES ±2°

WIRING DEVICE-KELLEMS
HUBBELL INCORPORATED
BRIDGEPORT, CT

DR. BY SRE | APP. BY
TR. BY | SCALE 1:2
CHK'D BY | DATE 3/9/10

DIMENSION SHEET FOR CAT. NO. CFB7G4

REPAIRABLE ☐ NON-REPAIRABLE ☒

B

M-11555

1

CODE 74545