M-11726 | 1

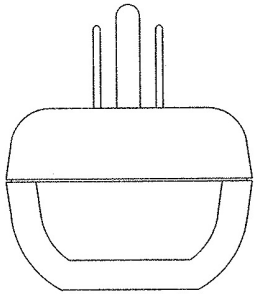

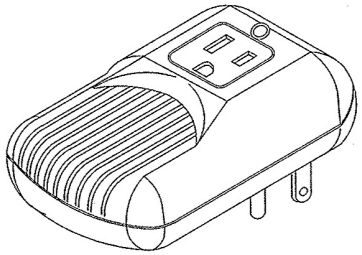

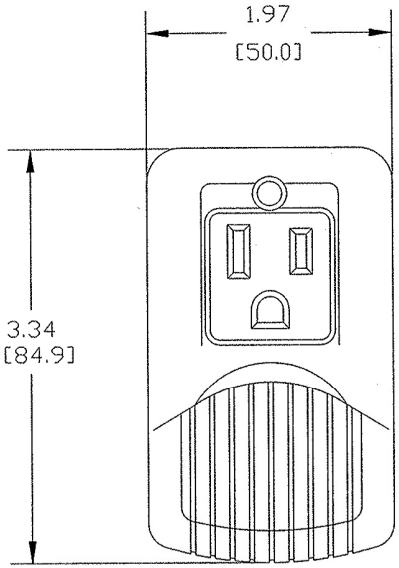

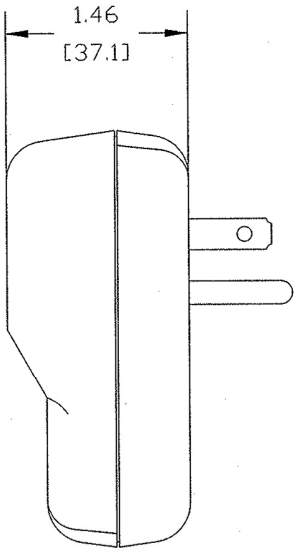

120VAC, 15A
VPR = 500V (L-N,L-G,N-G)

DIMENSIONS IN INCHES [MM]

LIST OF PARTS

DESCRIPTION	MATERIAL	FINISH

SYM	REVISIONS	APP	DATE
1	INITIAL RELEASE PER DCN. 16953 SPN	SL	10-13-10

THE DESIGN AND DIMENSIONS OF THE PRODUCT SHOWN ON THIS DRAWING ARE SUBJECT TO CHANGE WITHOUT NOTICE

TITLE
SURGE PROTECTIVE DEVICE
PLUG-IN, 750J

TOLERANCES UNLESS OTHERWISE SPECIFIED
~~FRACTIONS ±1/64~~
~~DECIMALS ±.005~~
~~ANGLES ±2°~~

WIRING DEVICE-KELLEMS
HUBBELL INCORPORATED
BRIDGEPORT, CT

DR. BY SPN	APP. BY SJL
TR. BY	SCALE NONE
CHK'D BY SJL	DATE 10/13/10

DIMENSION SHEET FOR CAT. NO. HBL1P1750

REPAIRABLE ☐ NON-REPAIRABLE ☐

B

M-11726 1

CODE 74545