M-11890 2

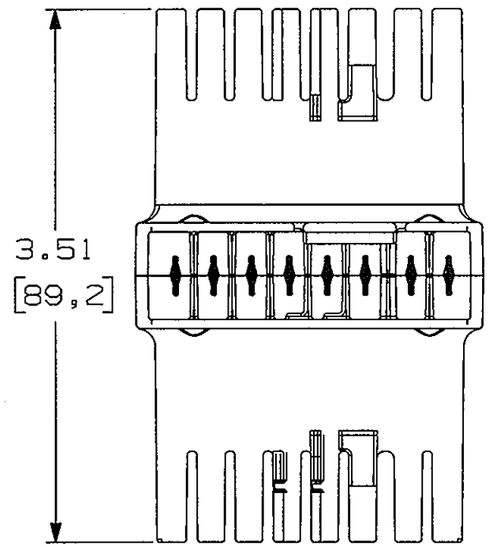

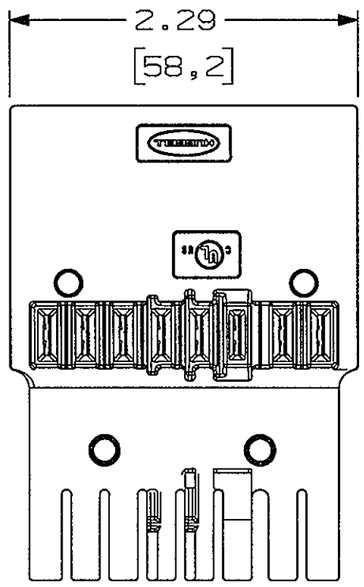

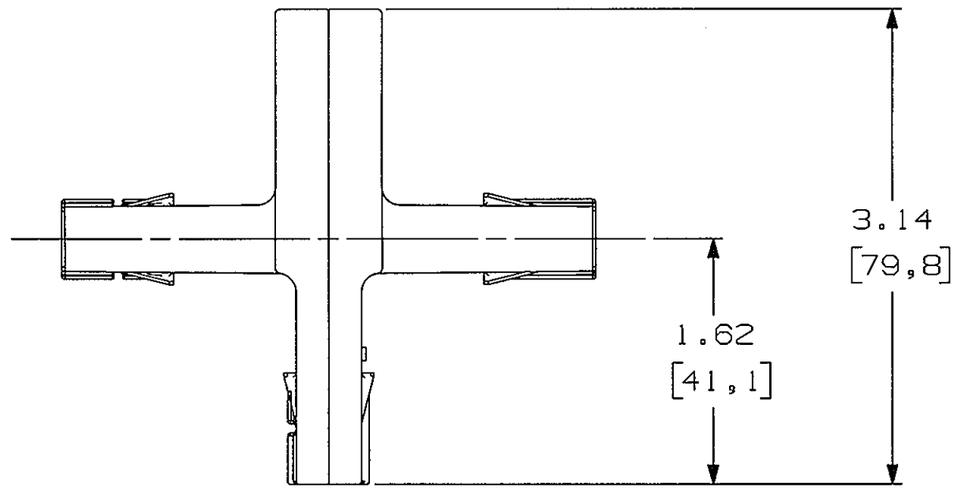

NOTES: (UNLESS OTHERWISE SPECIFIED)
1. DIMENSIONS ARE IN INCHES [mm].

LIST OF PARTS

DESCRIPTION	MATERIAL	FINISH
SPLITTER BODY	THERMOPLASTIC	GRAY
TERMINALS	COPPER ALLOY	
RIVET	STEEL	ZINC

SYM	REVISIONS	APP	DATE
2	MARKING "cULus" WAS "UL" & "CSA"; REMOVE DUST CAP PER DCN#19974		2/20/14
1	RELEASED FOR TOOLING PER DCN 18760		4/4/12

THE DESIGN AND DIMENSIONS OF THE PRODUCT SHOWN ON THIS DRAWING ARE SUBJECT TO CHANGE WITHOUT NOTICE

TITLE
422 SERIES SPLITTER

TOLERANCES UNLESS OTHERWISE SPECIFIED
.XX = ±.01
.XXX = ±.005
ANGLES = ±2°

WIRING DEVICE-KELLEMS
HUBBELL INCORPORATED
SHELTON, CT

DR. BY DMP	APP. BY
TR. BY	SCALE 1:1
CHK. BY	DATE 3-4-11

DIMENSION SHEET FOR CAT. NO.
SP84
REPAIRABLE ☐ NON-REPAIRABLE ☒
B
M-11890
2

CODE 74545