M-12286	1

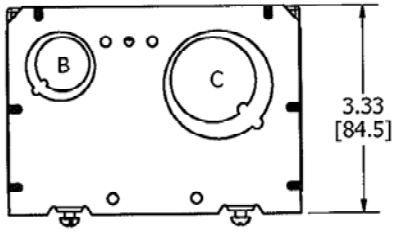

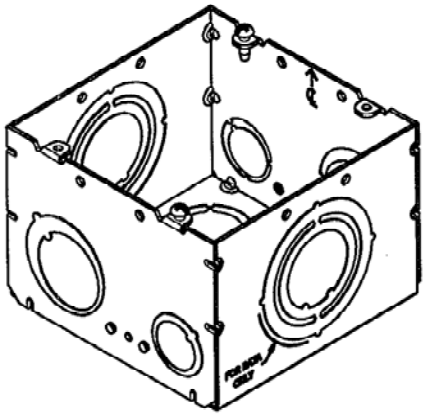

HBL260

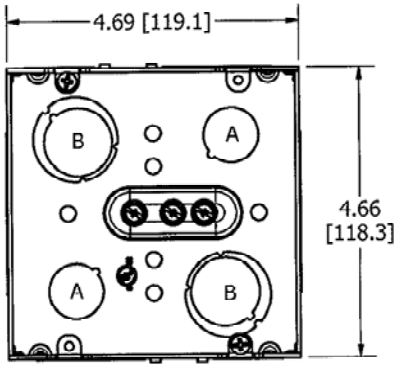

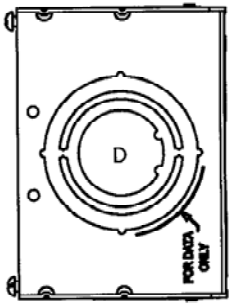

NOTES:
1. ALL DIMENSIONS ARE IN INCHES AND [MILLIMETERS].
2. ACCEPTS STANDARD 4-11/16 INCH [119.1] SQUARE COVERS FOR 1 AND 2 GANG USE, SOLD SEPARATELY.
3. MOUNTS ON 4-11/16 INCH [119.1] SQUARE BOX BRACKETS, SOLD SEPARATELY.
4. ACCEPTS HBL981 VOLTAGE PARTITION, SOLD SEPARATELY.
5. VOLUME: 66.7 IN³ [1093 CM³].
6. cULus LISTED.
7. GROUND SCREWS PROVIDED.

LABEL	KNOCKOUT TRADE SIZE	QUANTITY & LOCATION
A	1/2"	2 - BACK
B	3/4", 1", ECCENTRIC	2 - BACK, 2 - SIDES
C	1", 1 1/4" ECCENTRIC	2 - SIDES
D	1", 1 1/4, 1 1/2", 2" CONCENTRIC	2 - SIDES

CODE 74545

LIST OF PARTS

DESCRIPTION	MATERIAL	FINISH
BOX ASSEMBLY	STEEL	GALVANIZED

SYM	DESCRIPTION	APP	DATE
1	INITIAL RELEASE DCN19068	SBW	10/12/12

THE DESIGN AND DIMENSIONS OF THE PRODUCT SHOWN ON THIS DRAWING ARE SUBJECT TO CHANGE WITHOUT NOTICE

TITLE
LARGE CAPACITY WALL BOX
1 OR 2 GANG CONFIGURABLE

TOLERANCES UNLESS OTHERWISE SPECIFIED
.XX = ± .01
.XXX = ± .005
ANGLES = ± 2°

WIRING DEVICE-KELLEMS
HUBBELL INCORPORATED
SHELTON, CT.

DR. BY	SBW	APP. BY	SM
TR. BY		SCALE	1/2
CHK'D BY		DATE	10/12/2012

DIMENSION SHEET FOR CAT. NO. HBL260

REPAIRABLE ☐ NON-REPAIRABLE ☒

B

M-12286

1