M-12377 | 2

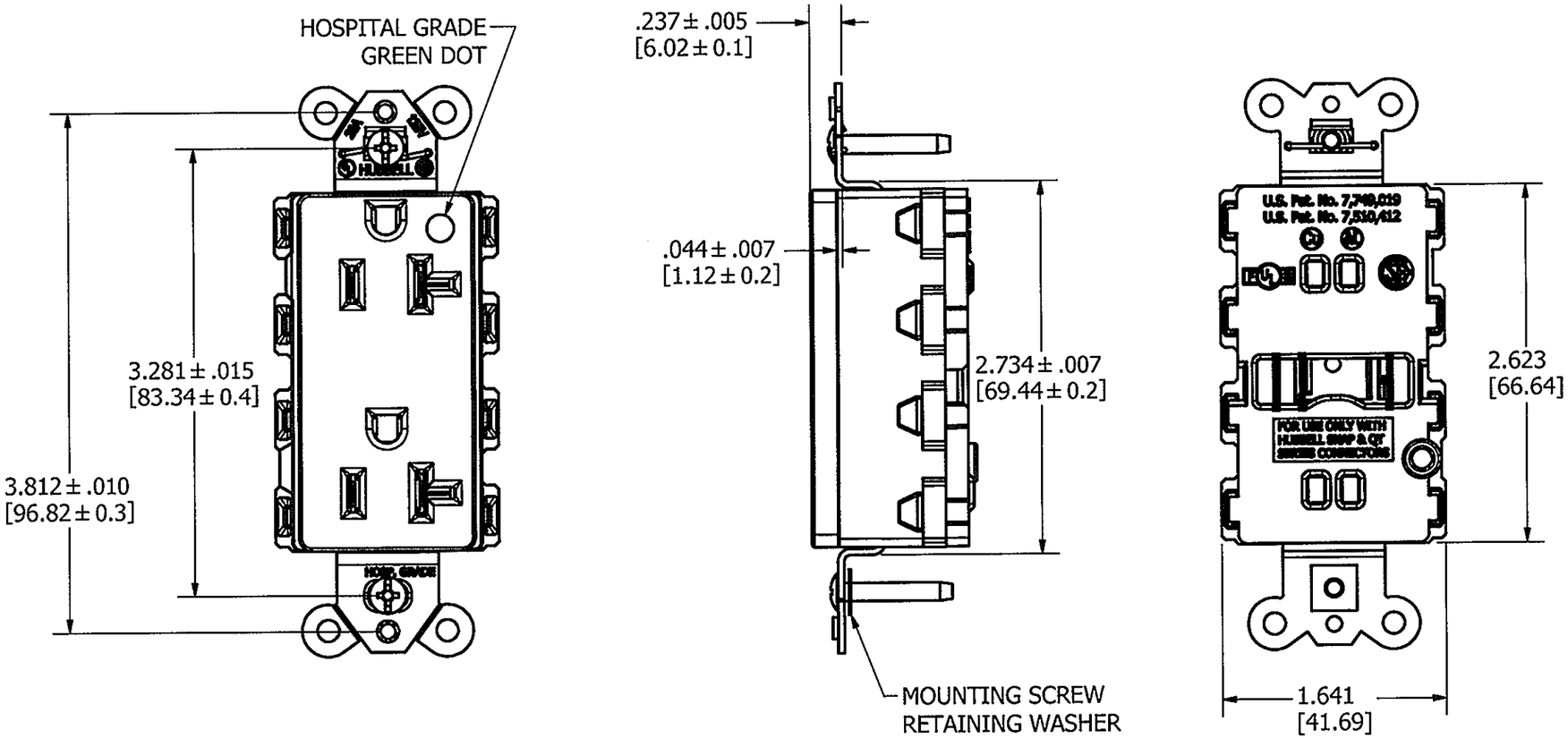

LIST OF PARTS		
DESCRIPTION	MATERIAL	FINISH
TOP	NYLON 6/6	SPI A-3
BASE	NYLON 6/6	SPI A-3
LINE CONTACTS	BRASS	
GROUND CONTACT	BRASS	
BRIDGE	.04 GALV STL	
STAPLE	S.S.	
WASHER	PVC FILM	BLACK
MOUNTING SCREWS	STEEL	ZINC PLT

RATING	BROWN	IVORY	GRAY	WHITE	BLACK	ALMOND	LIGHT ALMOND	OFFICE WHITE	ORANGE	RED	BLUE
15A	SNAP2172NA	SNAP2172INA	SNAP2172GYNA	SNAP2172WNA	SNAP2172BKNA	--	SNAP2172LANA	--	--	SNAP2172RNA	SNAP2172BLNA
20A	SNAP2182NA	SNAP2182INA	SNAP2182GYNA	SNAP2182WNA	SNAP2182BKNA	--	SNAP2182LANA	--	--	SNAP2182RNA	SNAP2182BLNA

NOTES:
1. DIMENSIONS ARE IN INCHES [MM].
2. ALL DEVICES UL LISTED AND CSA CERTIFIED.

SYM	DESCRIPTION	APPRO	DATE
2	01/17/2013 UPDATED FOR NEW LOCATION OF HG "DOT" PER DCN19283 EB	TLS TLS	12/18/2012

THE DESIGN AND DIMENSIONS OF THE PRODUCT SHOWN ON THIS DRAWING ARE SUBJECT TO CHANGE WITHOUT NOTICE

TITLE
DECORATOR RECEPTACLE, 15/20A 125V
HOSPITAL GRADE,
NON IG & TR & LED

TOLERANCES UNLESS OTHERWISE SPECIFIED
FRACTIONS ±1/64
DECIMALS ±.005
ANGLES ±2°

WIRING DEVICE-KELLEMS
HUBBELL INCORPORATED
SHELTON, CT

DR. BY ebazayev | APP. BY TLS
TR. BY | SCALE
CHK'D BY TLS | DATE 1/10/2013

DIMENSION SHEET FOR CAT. NO.
REPAIRABLE ☐ NON-REPAIRABLE ☐
B
M-12377
2

CODE 74545