| M-12491 | 1 |
|---|---|

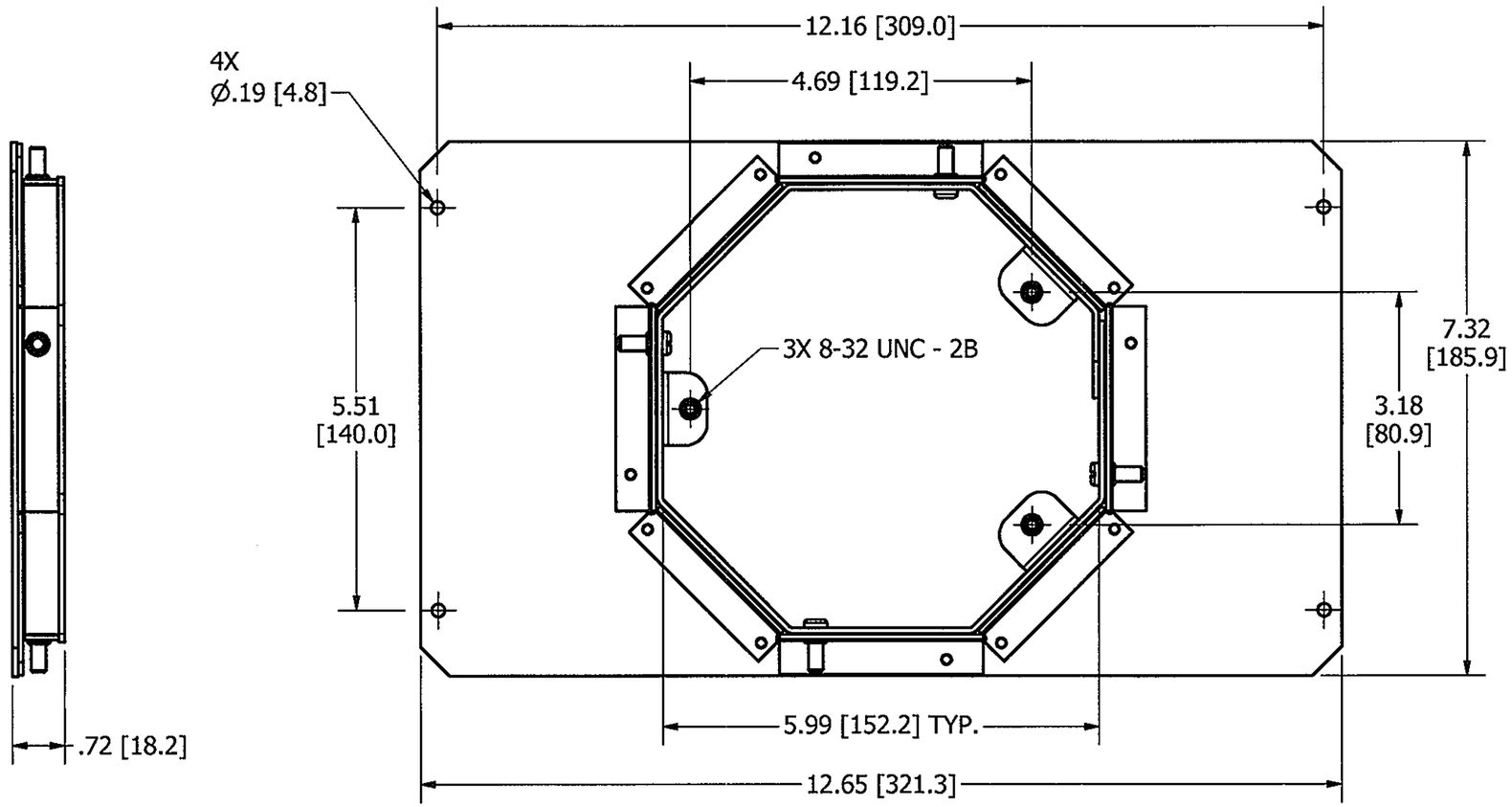


TEMPORARY CONCRETE COVER NOT SHOWN

NOTES:
1. ALL DIMENSIONS ARE IN INCHES AND [MILLIMETERS].
2. PRODUCT IS cULus LISTED. COMPLIES WITH UL 514A.
3. USE WITH RECESSED 2-GANG CONCRETE FLOOR BOXES (CFB2Gxx), SOLD SEPARATELY.
4. USE WITH SYSTEM 1 RECESSED 6 INCH COVERS (S1R6CVRxx) AND (S1R6CFBFFCVRxx), SOLD SEPARATELY.
5. MOUNTING HARDWARE INCLUDED.

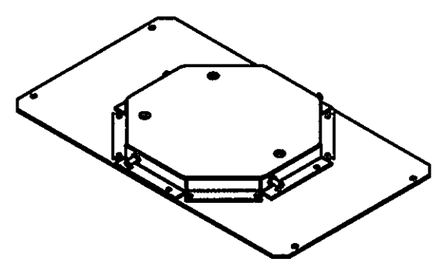

CFB2GS1R6ADAPT

LIST OF PARTS

| DESCRIPTION | MATERIAL | FINISH |
|---|---|---|
| ADAPTER PLATE | 14 GA. STEEL | ZINC |
| ANGLE BRACKETS | 16 GA. STEEL | ZINC |
| COLLAR | 16 GA. STEEL | ZINC |
| HARDWARE | STEEL | ZINC |

| SYM | DESCRIPTION | APP | DATE |
|---|---|---|---|
| 1 | INITIAL RELEASE PER DCN19233 | SBW | 11/15/13 |

THE DESIGN AND DIMENSIONS OF THE PRODUCT SHOWN ON THIS DRAWING ARE SUBJECT TO CHANGE WITHOUT NOTICE

TITLE
ADAPTER ASSEMBLY, SYSTEM ONE RECESSED 6 INCH COVER TO RECESSED 2-GANG CONC. FLOORBOX

TOLERANCES UNLESS OTHERWISE SPECIFIED
.XX = ± .01
.XXX = ± .005
ANGLES = ± 2°

WIRING DEVICE-KELLEMS
HUBBELL INCORPORATED
SHELTON, CT.

| | | | |
|---|---|---|---|
| DR. BY | SBW | APP. BY | |
| TR. BY | | SCALE | 1/2 |
| CHK'D BY | SM | DATE | 9/23/2013 |

DIMENSION SHEET FOR CAT. NO. CFB2GS1R6ADAPT

REPAIRABLE ☐ NON-REPAIRABLE ☒

B

M-12491

1

CODE 74545