M-12568 | 3

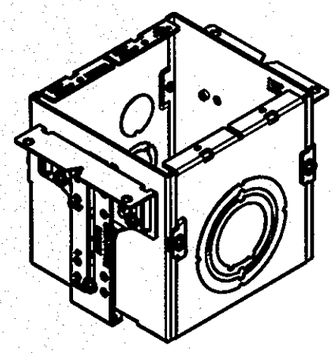

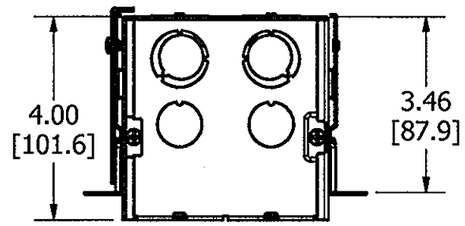

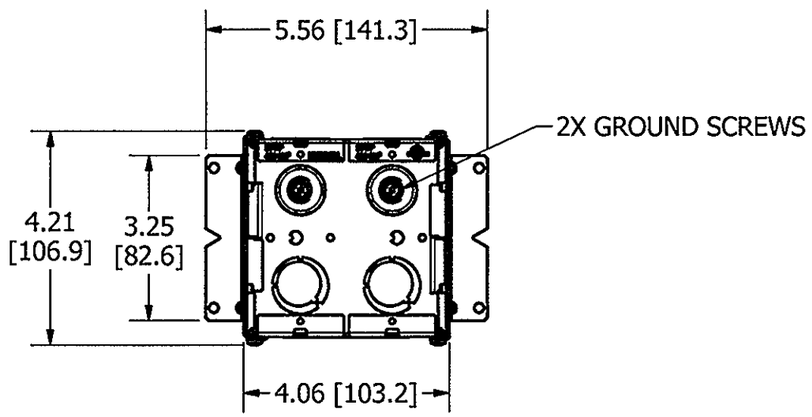

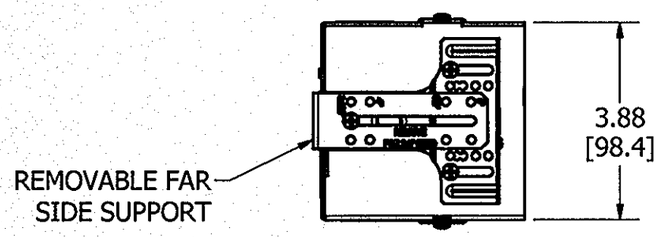

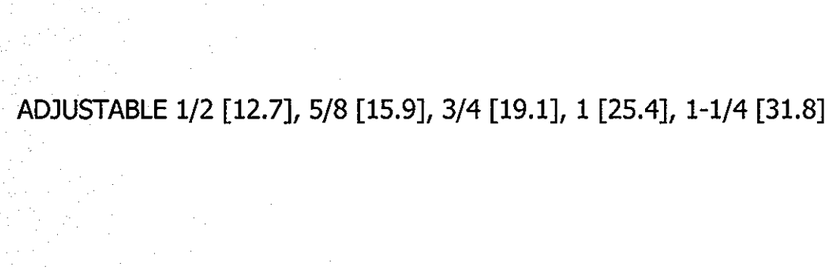

NOTES:
1. ALL DIMENSIONS ARE IN INCHES AND [MILLIMETERS].
2. MOUNTING BRACKETS AJUSTABLE FOR 1/2 [12.7] TO 1-1/4 [31.8] WALL THICKNESS.
3. FAR WALL SUPPORT INCLUDED. ADJUSTABLE RANGE: 3.63 [92.1] TO 6.00 [152.4]
4. ACCEPTS HBL989 VOLTAGE PARTITION, SOLD SEPARATELY.
5. BOX VOLUME: 54 IN³ [884 CM³].
6. cULus LISTED.

CODE 74545

KNOCKOUTS	
TRADE SIZE	LOCATIONS
1/2"	2 - TOP
1/2", 3/4" ECCENTRIC	2 - TOP, 2 - BACK
1", 1 1/4, 1 1/2", 2" CONCENTRIC	1 - BOTTOM

LIST OF PARTS

DESCRIPTION	MATERIAL	FINISH
GANGABLE SPACER	STEEL	GALVANIZED
END CAPS	STEEL	GALVANIZED
MOUNTING BRACKET	STEEL	GALVANIZED
SUPPORT BRACKET	STEEL	GALVANIZED
FASTENERS	STEEL	ZINC

SYM	DESCRIPTION	APP	DATE
3	REVISED PER DCN 20994	SBW	1/20/2015
2	REVISED PER DCN 20729	SBW	9/8/2014
1	INITIAL RELEASE DCN 20490	SBW	5/8/2014

THE DESIGN AND DIMENSIONS OF THE PRODUCT SHOWN ON THIS DRAWING ARE SUBJECT TO CHANGE WITHOUT NOTICE

TITLE
2 GANG DEEP WALLBOX, GANGABLE

TOLERANCES UNLESS OTHERWISE SPECIFIED
.XX = ± .01
.XXX = ± .005
ANGLES = ± 2°

WIRING DEVICE-KELLEMS
HUBBELL INCORPORATED
SHELTON, CT.

DR. BY	SBW	APP. BY	
TR. BY		SCALE	1/3
CHK'D BY		DATE	4/28/2014

DIMENSION SHEET FOR CAT. NO. HBL985

REPAIRABLE ☐ NON-REPAIRABLE ☒

B

M-12568

3