M-12572 | 2

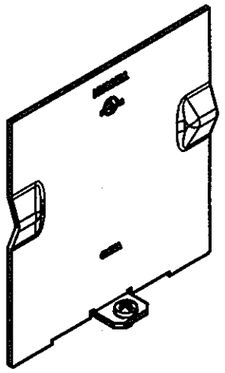

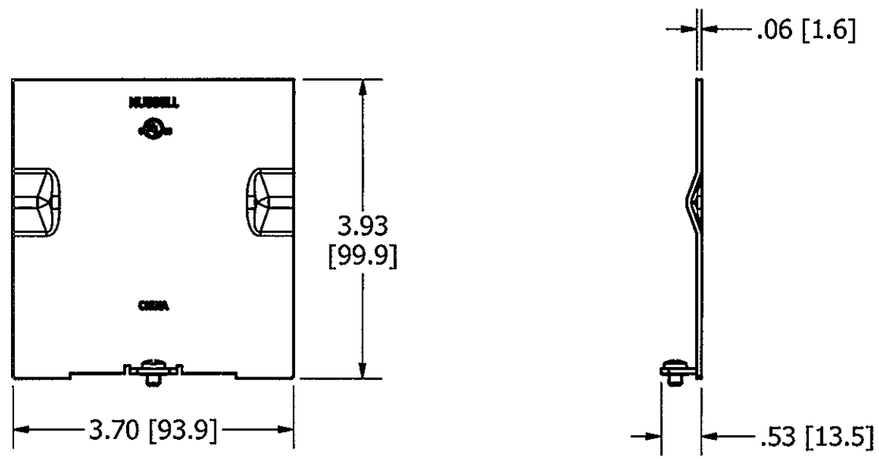

NOTES:
1. ALL DIMENSIONS ARE IN INCHES AND [MILLIMETERS].
2. FOR USE WITH DEEP GANGABLE WALL BOXES, HBL98x SERIES, SOLD SEPARATELY.
3. cULus LISTED.

CODE 74545

LIST OF PARTS

DESCRIPTION	MATERIAL	FINISH
PARTITION	STEEL	GALVANIZED
FASTENER	STEEL	ZINC
RETAINER	PVC	

SYM	DESCRIPTION	APP	DATE
2	REVISED PER DCN 20729	SBW	9/8/2014
1	INITIAL RELEASE DCN 20490	SBW	5/8/2014

THE DESIGN AND DIMENSIONS OF THE PRODUCT SHOWN ON THIS DRAWING ARE SUBJECT TO CHANGE WITHOUT NOTICE

TITLE
VOLTAGE PARTITION FOR USE WITH DEEP GANGABLE WALLBOXES

TOLERANCES UNLESS OTHERWISE SPECIFIED
.XX = ± .01
.XXX = ± .005
ANGLES = ± 2°

WIRING DEVICE-KELLEMS
HUBBELL INCORPORATED
SHELTON, CT.

DR. BY	SBW	APP. BY	
TR. BY		SCALE	1/2
CHK'D BY		DATE	4/28/2014

DIMENSION SHEET FOR CAT. NO. HBL989

REPAIRABLE ☐ NON-REPAIRABLE ☒

B

M-12572

2