M-13277 | 1

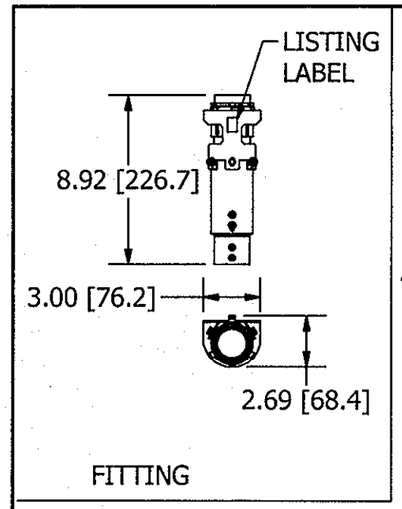

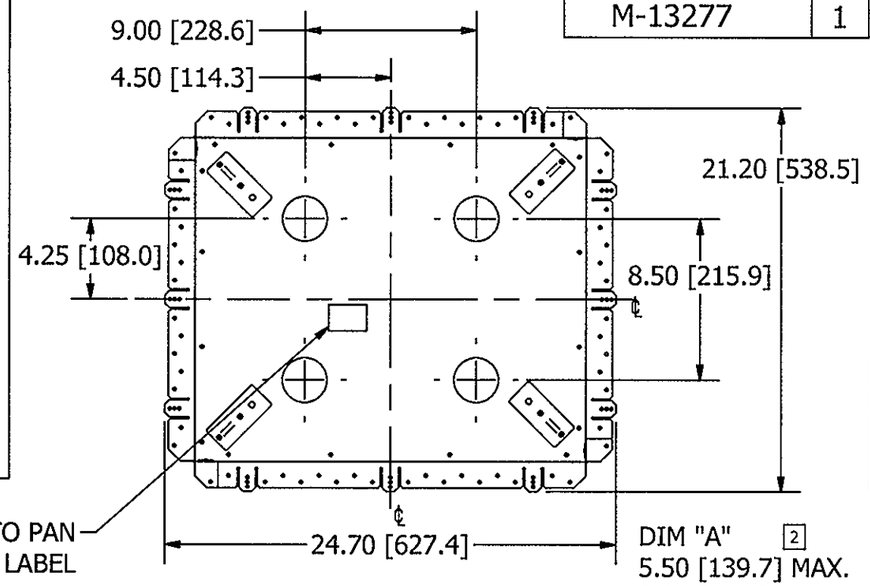

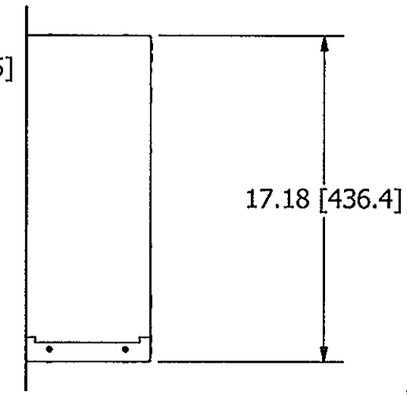

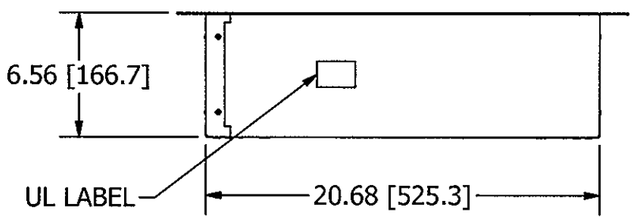

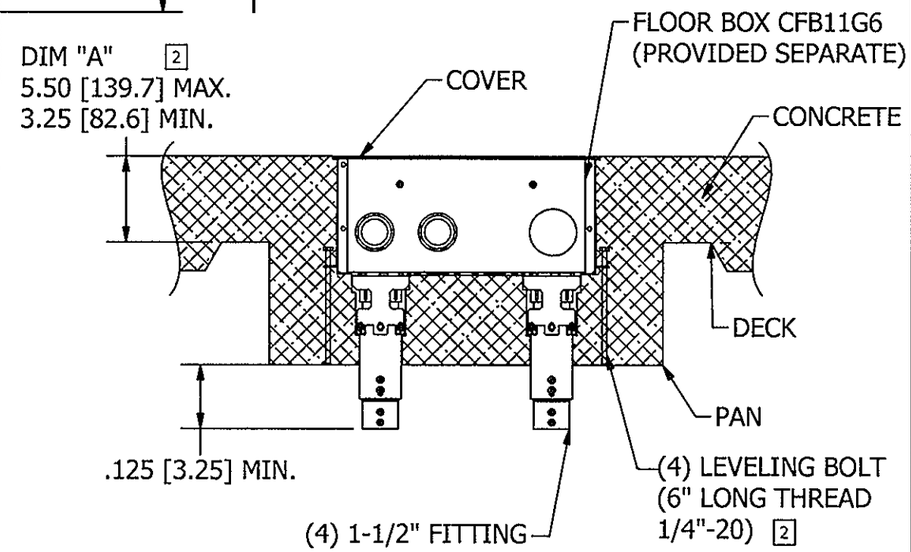

ASSY VIEW WITH CONCRETE POURED

NOTES:
1. THIS PRODUCT KIT TO BE USED WITH FLOOR BOX CAT.# CFB11G6.
2. WITH USER SUPPLIED LONGER 1/4"-20 THREADED ROD: DIM "A"=6.00 [152.4] MAX.
3. ALL DIMENSIONS ARE IN INCHES [mm].

LIST OF PARTS

DESCRIPTION	MATERIAL	FINISH
PAN	GALV. STEEL	
FITTING	STEEL	Zn PLATE
LEVELING BOLT	STEEL	Zn PLATE

SYM	DESCRIPTION	APPRO	DATE
1	3/15/16 NEW RELEASE PER DCN #21863	DLI	2/19/16

THE DESIGN AND DIMENSIONS OF THE PRODUCT SHOWN ON THIS DRAWING ARE SUBJECT TO CHANGE WITHOUT NOTICE

TITLE
FIRE-RESISTANT KIT (PAN & 4 FITTINGS) FOR 11 GANG FLOOR BOX CFB11G6

TOLERANCES UNLESS OTHERWISE SPECIFIED
FRACTIONS ±1/64
DECIMALS ±.005
ANGLES ±2°

WIRING DEVICE-KELLEMS
HUBBELL INCORPORATED
SHELTON, CT

DR. BY	DLI	APP. BY	DLI
TR. BY		SCALE	1 : 8
CHK'D BY		DATE	2/15/2016

DIMENSION SHEET FOR CAT. NO.
CFB11G6FRK
REPAIRABLE ☐
NON-REPAIRABLE ☒
B
M-13277
1

CODE 74545