M-13507 | 1

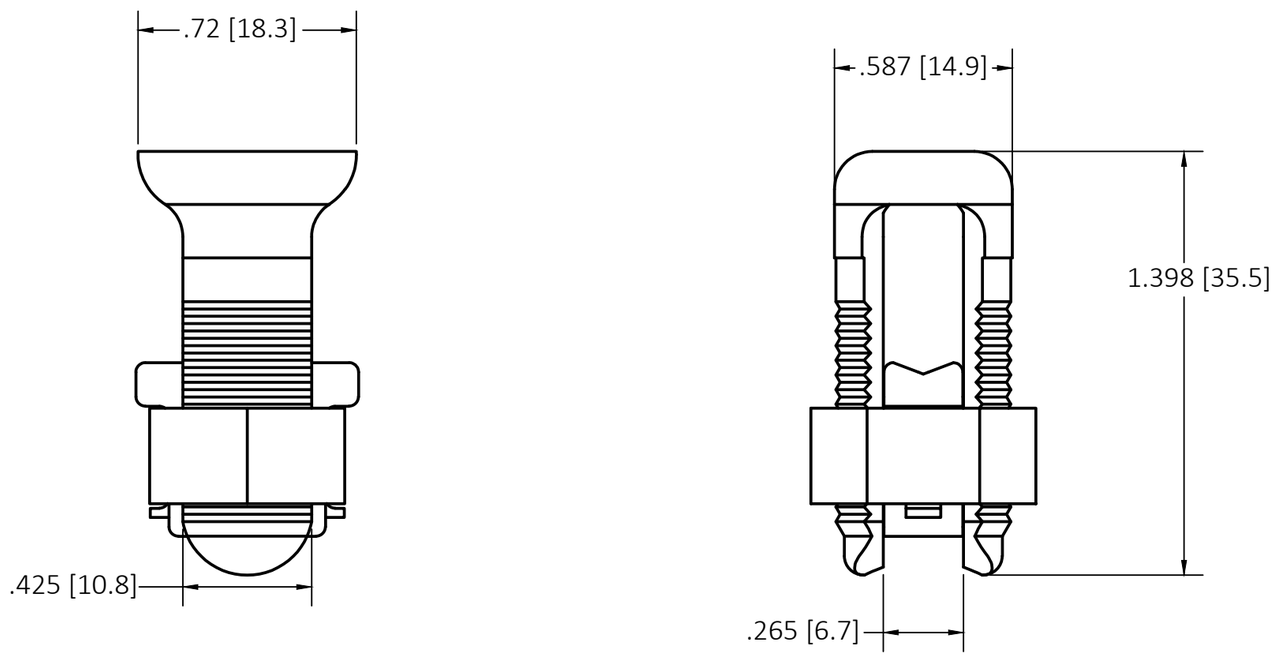

NOTES:

1. BOLTS ARE USED FOR SUPPLEMENTAL GROUNDING
2. THE INSTALLER MUST SUPPLY #6 AWG GROUNDING WIRE
3. ONE BOLT IS INSTALLED PER SECTION OF BASKET TRAY

CAGE CODE 74545

LIST OF PARTS

DESCRIPTION	MATERIAL	FINISH
SPLIT BOLTS	CARBON STEEL	COPPER ALLOY

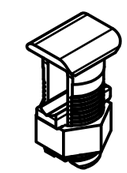

CATALOG NO.
HBTSPLITBOLTPK10
(NOT SHOWN TO SCALE)

REV	DESCRIPTION	APP	DATE
1	INITIAL DOCUMENT RELEASE PER DCN 22750	DDL	11/15/16

THE DESIGN AND DIMENSIONS OF THE PRODUCT SHOWN ON THIS DRAWING ARE SUBJECT TO CHANGE WITHOUT NOTICE. DIMENSIONS ARE IN INCHES [mm].

TITLE

GROUNDING SPLIT BOLTS

WIRING DEVICE-KELLEMS
HUBBELL INCORPORATED
SHELTON, CT

TOLERANCES UNLESS OTHERWISE SPECIFIED
.XX = ± .01
.XXX= ± .005
ANGLE TOL. ±2˚

DR. BY	BJ	SCALE	NONE
CHK. BY	MN	DATE	08/16/16

DIMENSION SHEET FOR CAT. NO.
HBTSPLITBOLTPK10

B

M-13507

1