M-13665 | 2

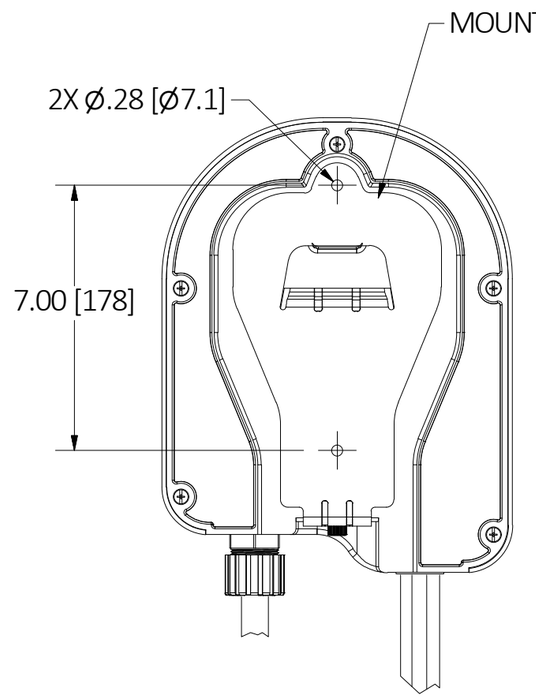

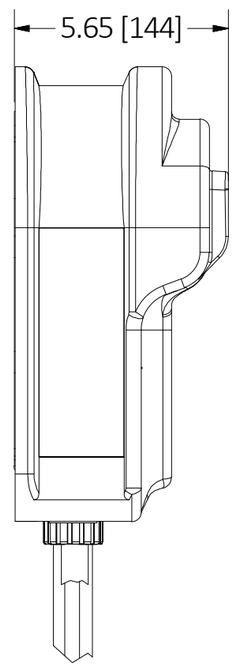

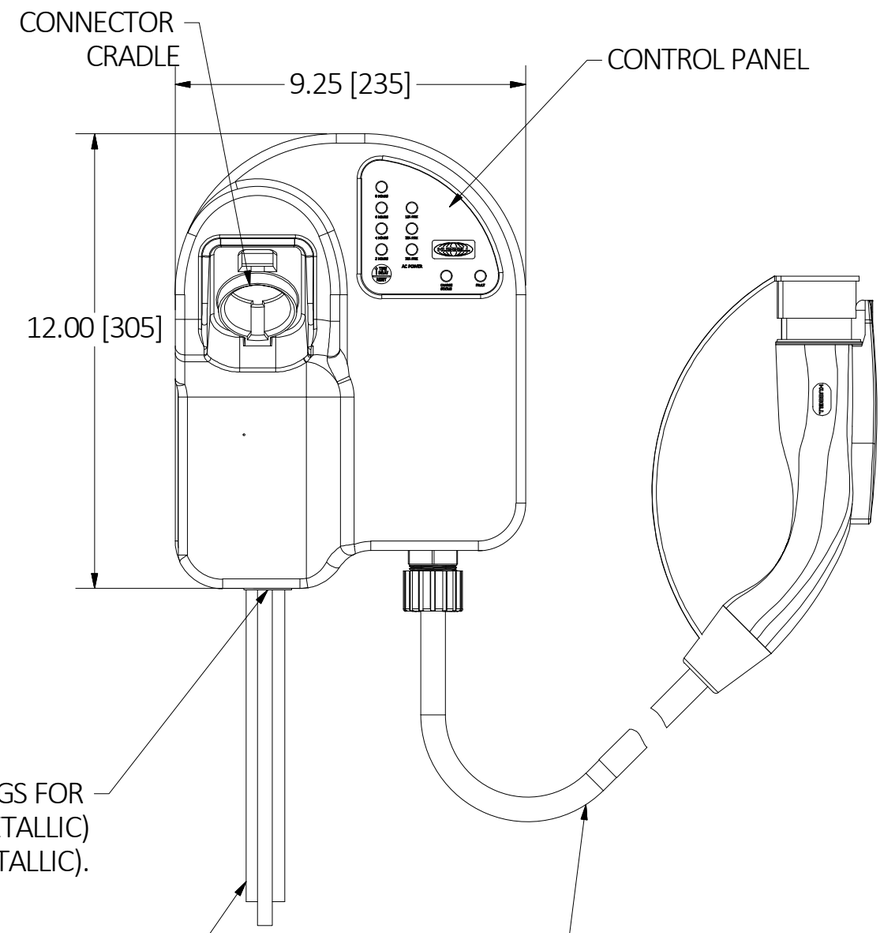

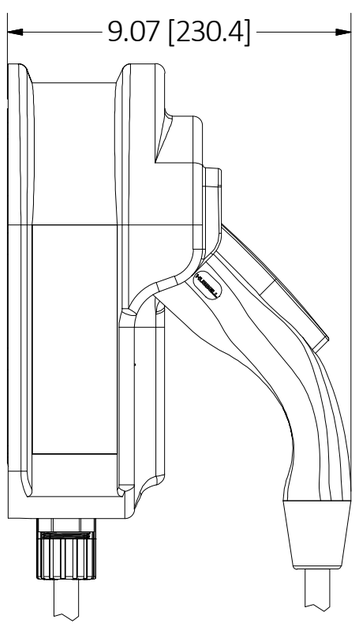

NOTES:
- ALL DIMENSIONS ARE IN / [MM] FORMAT, UNLESS OTHERWISE NOTED.
- ELECTRICAL RATING: 208/240 V, 30A, 60 Hz
- ADJUSTABLE MAX CURRENT - 30A, 20A OR 15A
- TYPE 3S ENCLOSURE
- DELAYED CHARGE FUNCTION: 2,4,6 & 8 HOURS
- BUILT IN GFCI MODULE
- UL LISTED.

CAGE CODE 74545

LIST OF PARTS

DESCRIPTION	MATERIAL	FINISH
MAIN ENCLOSURE	ALUMINUM	BLACK POWDER COAT
MOUNTING BRACKET	GALV. STEEL	BLACK POWDER COAT

REV	DESCRIPTION	APP	DATE
2	ADDED FITTING CAT NO, UPDATED ENCLOSURE TYPE. PER DCN#23510	EMD	1/5/18
1	RELEASED PER DCN#23278	EMD	8/4/17

THE DESIGN AND DIMENSIONS OF THE PRODUCT SHOWN ON THIS DRAWING ARE SUBJECT TO CHANGE WITHOUT NOTICE. DIMENSIONS ARE IN INCHES [mm].

TITLE

EV CHARGER, HARDWIRED

WIRING DEVICE-KELLEMS
HUBBELL INCORPORATED
SHELTON, CT

TOLERANCES UNLESS OTHERWISE SPECIFIED
.XX = ± .01
.XXX= ± .005
ANGLE TOL. ±2˚

DR. BY	EMD	SCALE	1 / 4
CHK. BY	SM	DATE	6/8/17

DIMENSION SHEET FOR CAT. NO.
HBLEV30BHW

B

M-13665

2