CATALOG NO.	DESCRIPTION	USB CONFIG./COLOR	COLOR
HCPWRPED52GRY	HUBBELL POWER CHARGING STAND	TYPE A-C COMBO / GRAY	GRAY

M-13709 | 1

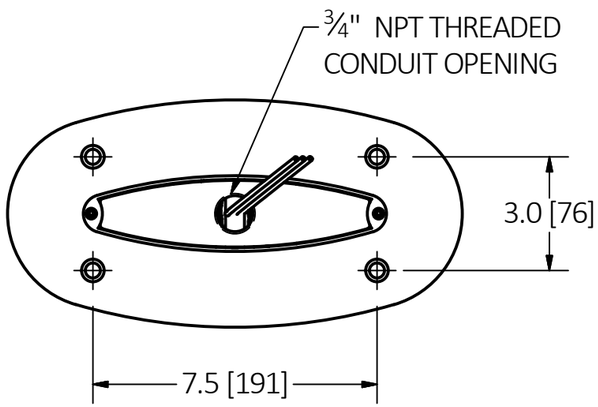

BOTTOM VIEW
1/4 SCALE

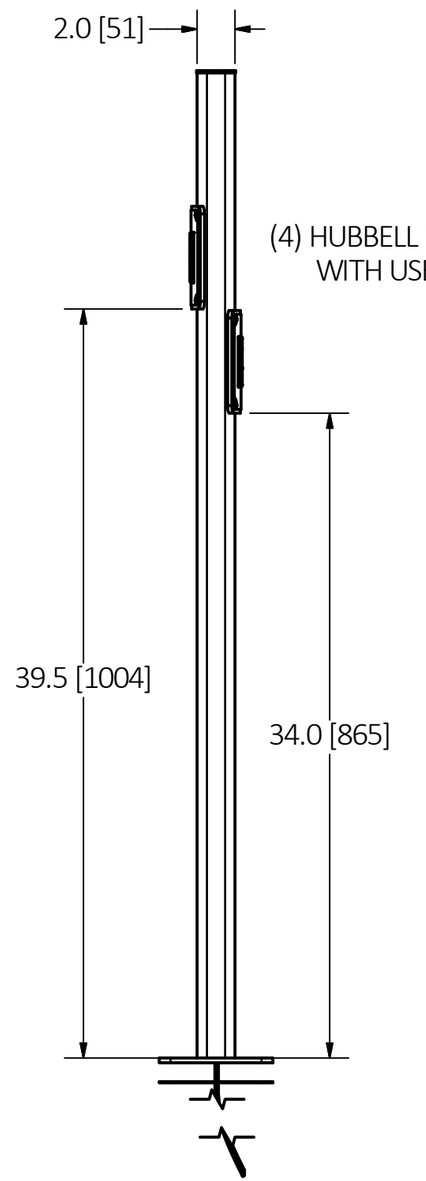

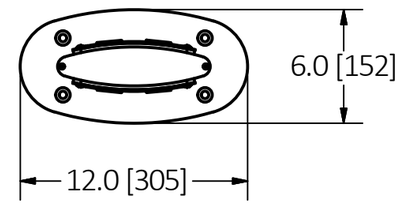

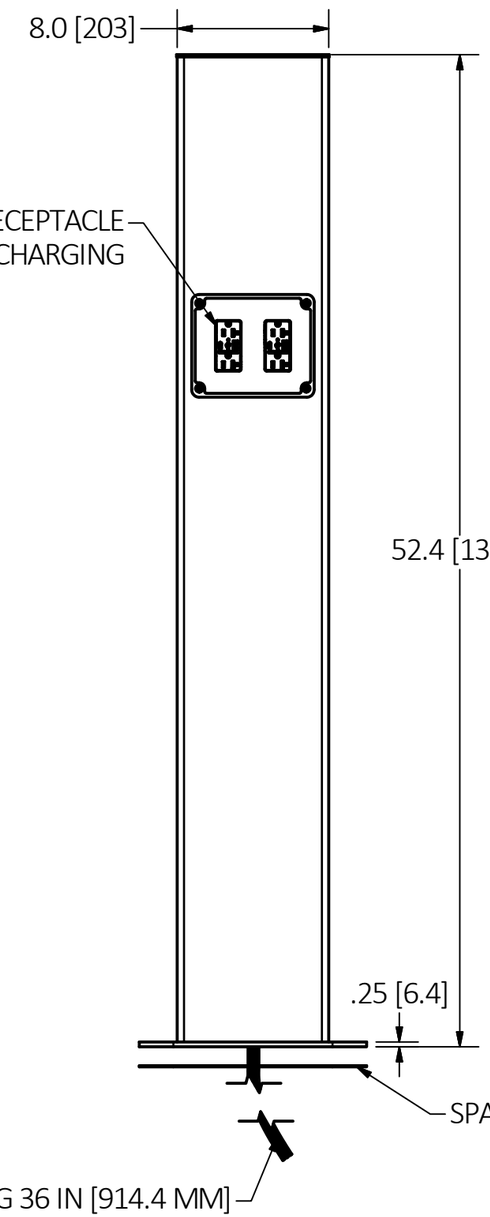

NOTES:
- ALL DIMENSIONS ARE IN INCHES [MM].
- cULus LISTED TO UL 1773
- ELECTRICAL RATING: 125VAC, 20A / 5V DC, 5A USB CHARGING

CAGE CODE 74545

LIST OF PARTS

DESCRIPTION	MATERIAL	FINISH
MAIN ENCL.	ALUMINUM	POWDER COAT
SPACER	STAINLESS ST.	
SCREWS	STEEL	ZINC PLATED

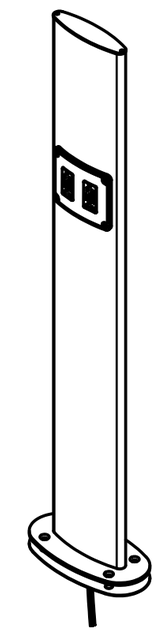

REV	DESCRIPTION	APP	DATE
1	RELEASED PER DCN 23326	EMD	9/6/2017

THE DESIGN AND DIMENSIONS OF THE PRODUCT SHOWN ON THIS DRAWING ARE SUBJECT TO CHANGE WITHOUT NOTICE. DIMENSIONS ARE IN INCHES [mm].

TITLE

CHARGING POWER PEDESTAL

WIRING DEVICE-KELLEMS
HUBBELL INCORPORATED
SHELTON, CT

TOLERANCES UNLESS OTHERWISE SPECIFIED
.XX = ± .01
.XXX= ± .005
ANGLE TOL. ±2°

DR. BY	EMD	SCALE	1/8
CHK. BY		DATE	8/15/17

DIMENSION SHEET FOR CAT. NO.
HCPWRPED52xx

B

M-13709

1