CATALOG NO.	DESCRIPTION	USB CONFIG./COLOR	COLOR
HCPWRPED52LKGRY	HUBBELL POWER CHARGING STAND WITH LIGHT KIT	TYPE A-C COMBO / GRAY	GRAY

M-13710 | 1

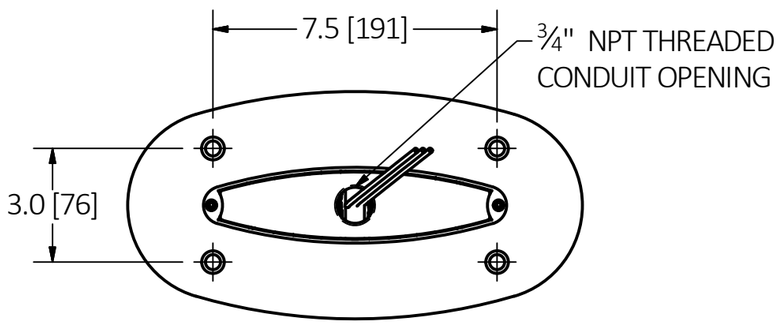

BOTTOM VIEW
1/4 SCALE

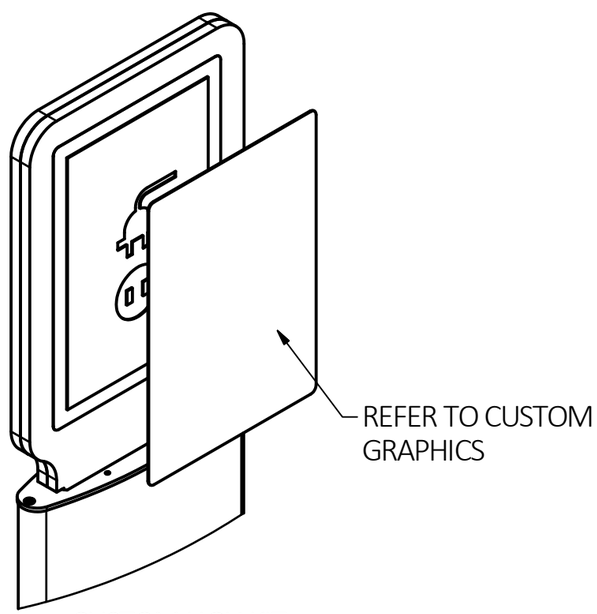

CUSTOM LIGH KIT
1/4 SCALE

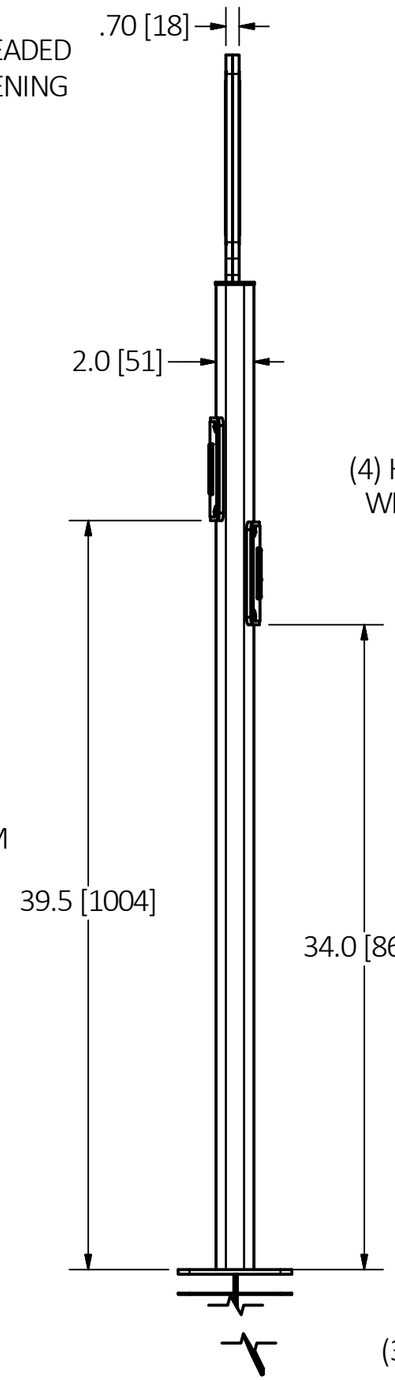

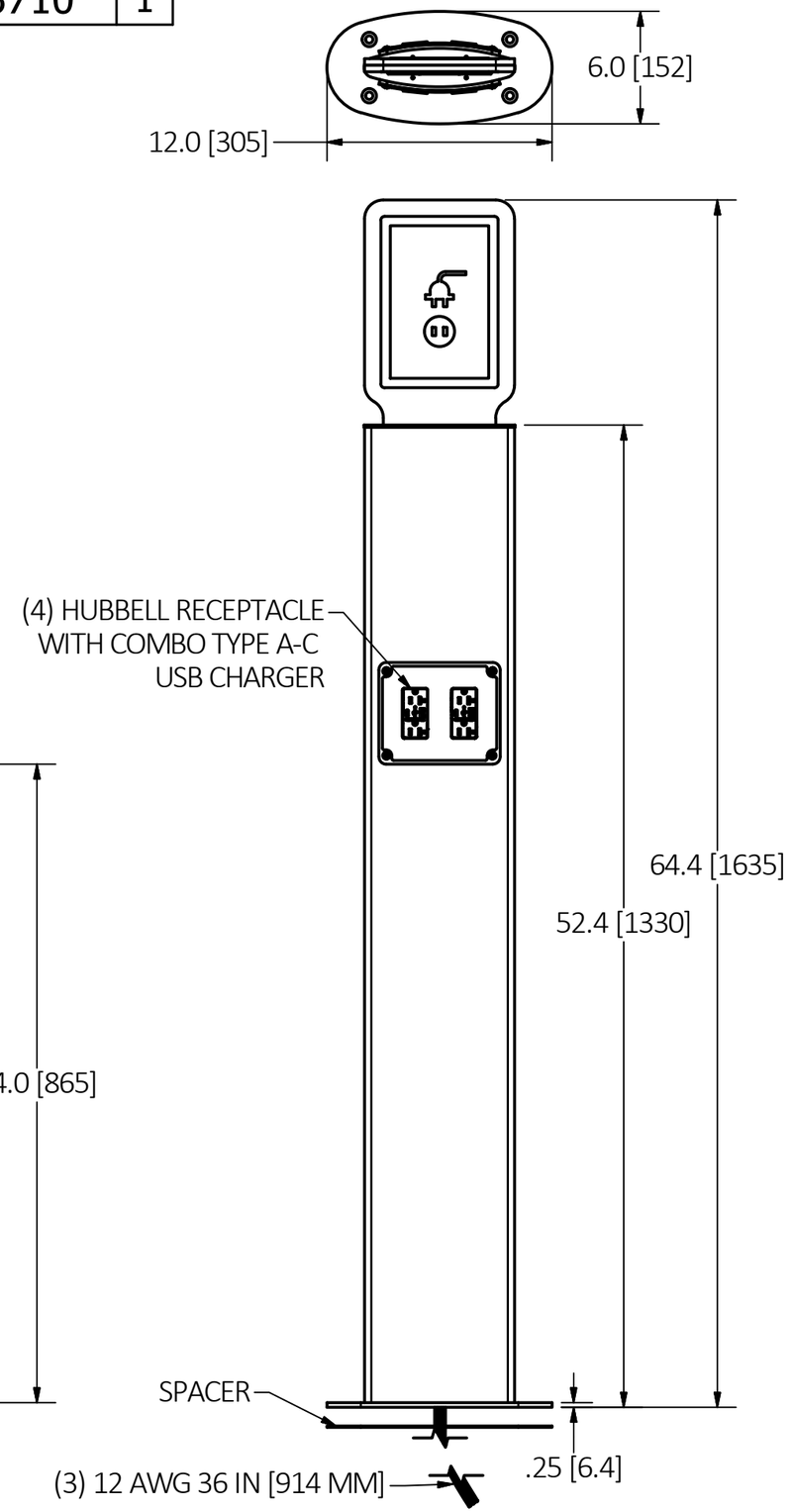

NOTES:
- ALL DIMENSIONS ARE IN INCHES [MM].
- cULus LISTED TO UL 1773
- ELECTRICAL RATING: 125VAC, 20A / 5V DC, 5A USB CHARGING
- OPTIONAL CUSTOM GRAPHICS

CAGE CODE 74545

LIST OF PARTS

DESCRIPTION	MATERIAL	FINISH
MAIN ENCL.	ALUMINUM	POWDER COAT
SPACER	STAINLESS ST.	
SCREWS	STEEL	ZINC PLATED
LIGHT KIT	THERMOPLASTIC	

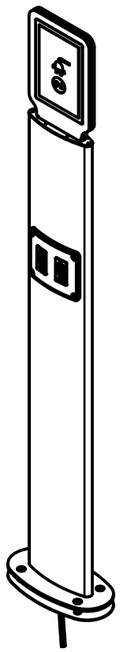

REV	DESCRIPTION	APP	DATE
1	RELEASED PER DCN 23326	EMD	9/6/2017

THE DESIGN AND DIMENSIONS OF THE PRODUCT SHOWN ON THIS DRAWING ARE SUBJECT TO CHANGE WITHOUT NOTICE. DIMENSIONS ARE IN INCHES [mm].

TITLE
CHARGING POWER PEDESTAL WITH LIGHT KIT

WIRING DEVICE-KELLEMS
HUBBELL INCORPORATED
SHELTON, CT

TOLERANCES UNLESS OTHERWISE SPECIFIED
.XX = ± .01
.XXX= ± .005
ANGLE TOL. ±2°

DR. BY	EMD	SCALE	1/8
CHK. BY		DATE	8/16/17

DIMENSION SHEET FOR CAT. NO.
HCPWRPED52LKxx

B

M-13710

1