M-13763 | 1

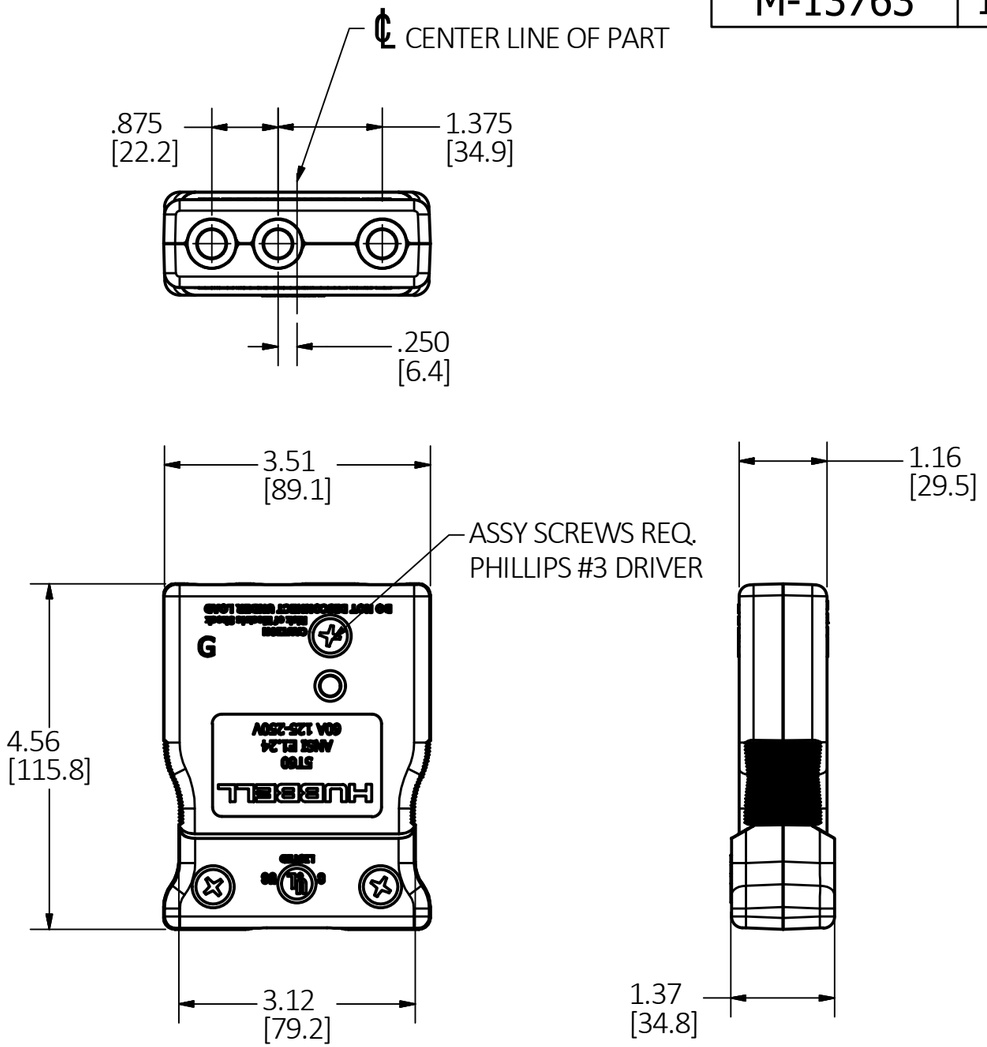

LIST OF PARTS		
DESCRIPTION	MATERIAL	FINISH
TOP	NYLON	BLACK
BOTTOM	NYLON	BLACK
FEMALE SLEEVES	BRASS	
THERMOSET SLEEVES	PHENOLIC	BLACK
STRAIN RELIEFS	NYLON	BLACK
ASSY SCREWS	THD. FORMING	BLACK
WIRE FERRULE	COPPER	TIN PLATED
TERM. SCREWS	STAINLESS STEEL	

DIMENSION SHEET FOR CAT. NO.
HBL60SPF

NOTES: UNLESS OTHERWISE SPECIFIED:

1. DIMENSIONS ARE IN INCHES [mm] AND ARE FOR REFERENCE ONLY.
2. cULus Listed.
3. MEETS ESTA CONFIGURATION TYPE 5T60, ANSI E1.24 STANDARD.
4. ELECTRICAL RATING: 60A 125-250V
5. CABLE RANGE #4AWG - #8AWG.
6. FERRULE SIZES #4 AND #6 INCLUDED.

CABLE COMBINATIONS TABLE	
CABLE TYPES	NUMBER OF STRAIN RELIEF INSERTS
(2) #6SC + (1)#6SC GRN	2
(4) #6SC + (2)#6SC GRN	1
(2)#4SC + (1)#6SC GRN	2
#8/3C TYPE W	1
#6/3C TYPE W	1
#4/3C TYPE SOOW	1

REV	DESCRIPTION	APP	DATE
1	NEW RELEASE PER DCN 23458 CAC		11-29-17

THE DESIGN AND DIMENSIONS OF THE PRODUCT SHOWN ON THIS DRAWING ARE SUBJECT TO CHANGE WITHOUT NOTICE. DIMENSIONS ARE IN INCHES [mm].

TITLE

60A STAGE PIN IN-LINE FEMALE

WIRING DEVICE-KELLEMS
HUBBELL INCORPORATED
SHELTON, CT

TOLERANCES UNLESS OTHERWISE SPECIFIED
.XX = ± .01
.XXX = ± .005
ANGLE TOL. ±2°

DR. BY	CAC	SCALE	1 / 2
CHK. BY		DATE	10-26-17

B

M-13763

1

CAGE CODE 74545