M-13768 | 1

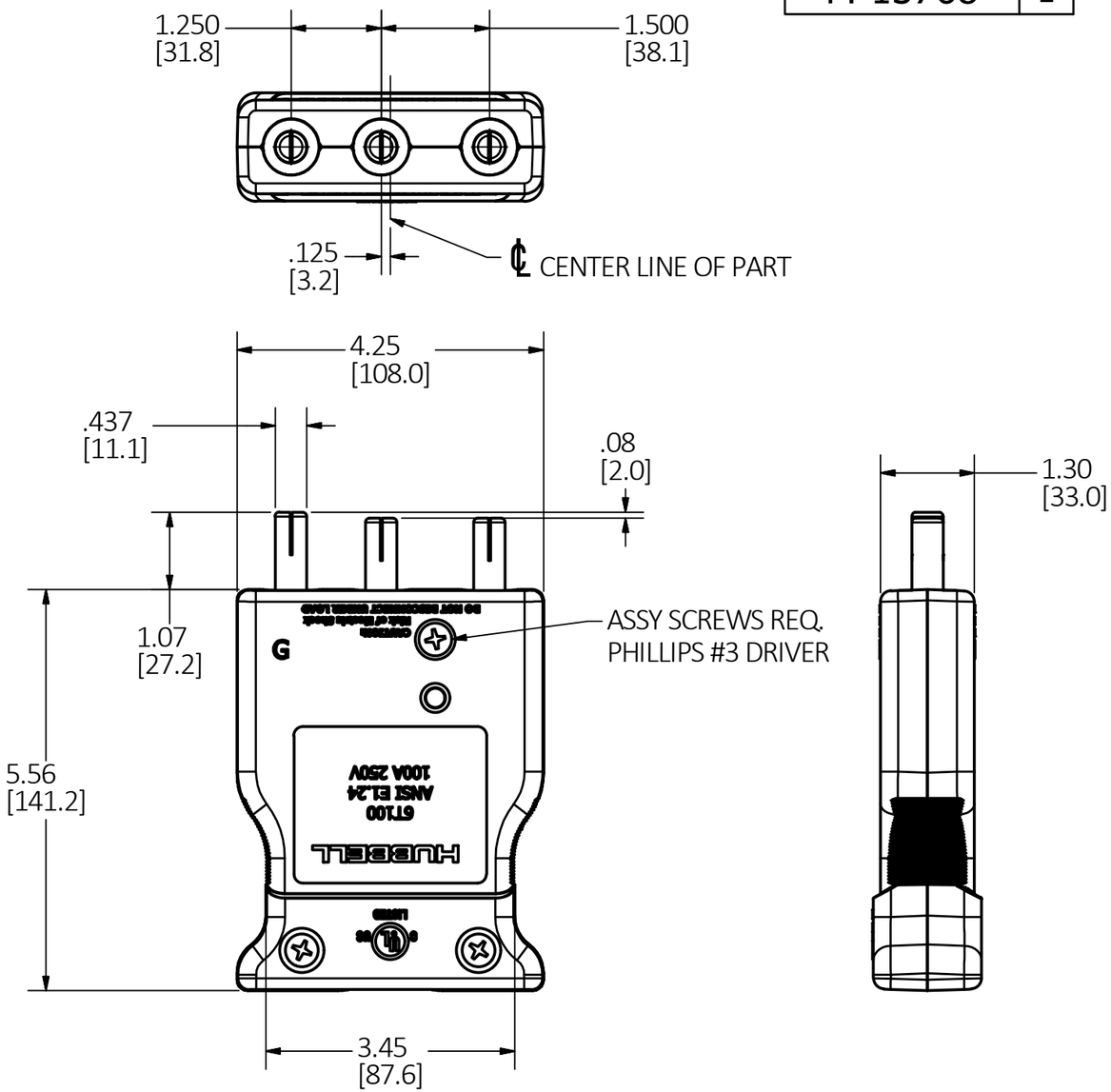

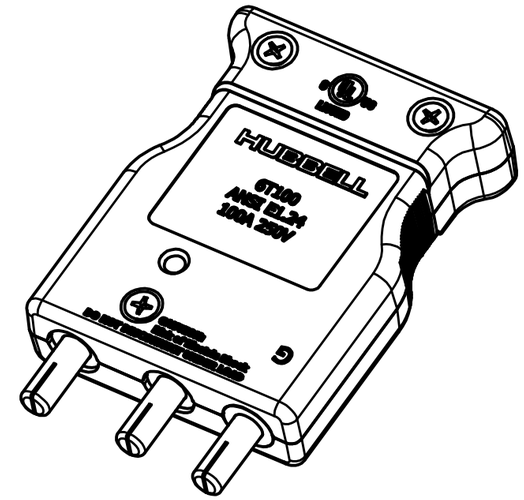

NOTES: UNLESS OTHERWISE SPECIFIED:

1. DIMENSIONS ARE IN INCHES [mm] AND ARE FOR REFERENCE ONLY.
2. cULus Listed.
3. MEETS ESTA CONFIGURATION TYPE 6T100, ANSI E1.24 STANDARD.
4. ELECTRICAL RATING: 100A 250V.
5. CABLE RANGE #2AWG OR #4AWG - (GROUNDING WIRE #6AWG MINIMUM).
6. FERRULE SIZES #2, #4 AND #6 INCLUDED.

CAGE CODE 74545

TABLE

CABLE TYPES	NUMBER OF STRAIN RELIEF INSERTS
(2) #4SC + (1)#6SC GRN	2
(4) #4SC + (2)#6SC GRN	1
(2)#2SC + (1)#6SC GRN	2
#6/3C TYPE W	1
#4/3 TYPE SOOW	1

LIST OF PARTS

DESCRIPTION	MATERIAL	FINISH
TOP	NYLON	BLACK
BOTTOM	NYLON	BLACK
MALE PINS	BRASS	
THERMOSET SLEEVES	PHENOLIC	BLACK
STRAIN RELIEFS	NYLON	BLACK
ASSY. SCREWS	THD. FORMING	BLACK
WIRE FERRULE	COPPER	TIN PLATED
TERM. SCREWS	STAINLESS ST.	

REV	DESCRIPTION	APP	DATE
1	NEW RELEASE PER DCN 23458 CAC		11-29-17

THE DESIGN AND DIMENSIONS OF THE PRODUCT SHOWN ON THIS DRAWING ARE SUBJECT TO CHANGE WITHOUT NOTICE. DIMENSIONS ARE IN INCHES [mm].

TITLE

100A (250V) STAGE PIN IN-LINE MALE

WIRING DEVICE-KELLEMS
HUBBELL INCORPORATED
SHELTON, CT

TOLERANCES UNLESS OTHERWISE SPECIFIED
.XX = ± .01
.XXX= ± .005
ANGLE TOL. ±2°

DR. BY CAC | SCALE 1 / 2
CHK. BY | DATE 10-26-17

DIMENSION SHEET FOR CAT. NO.
HBL106SPM

B

M-13768

1