M-13770 | 1

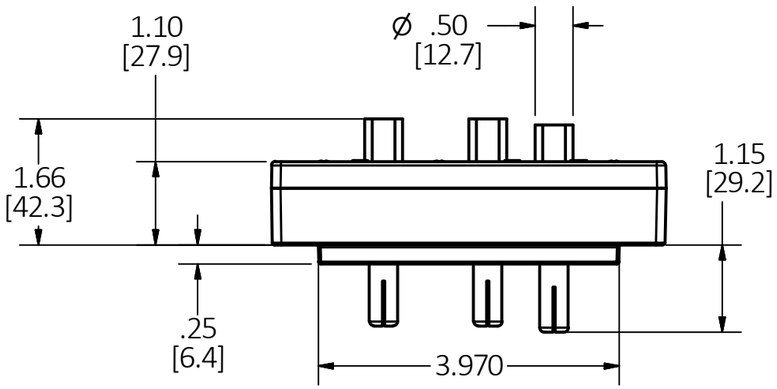

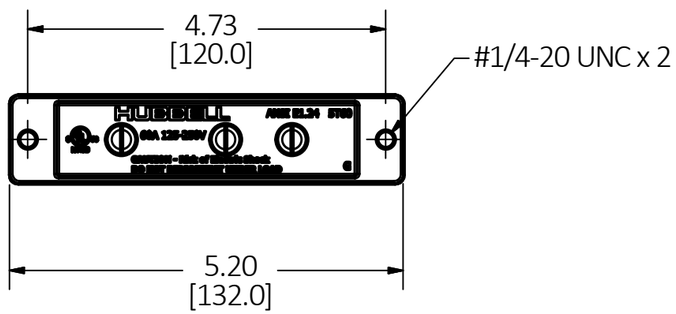

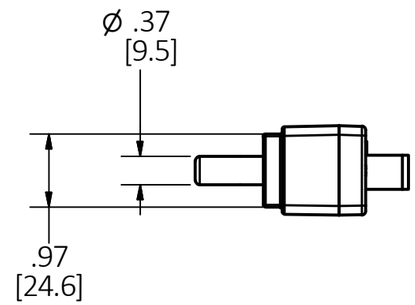

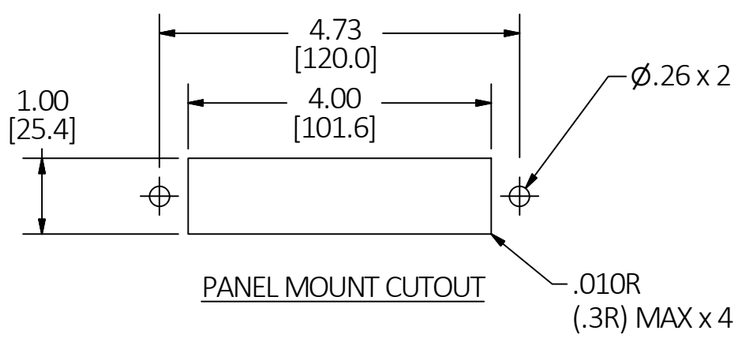

PANEL MOUNT CUTOUT

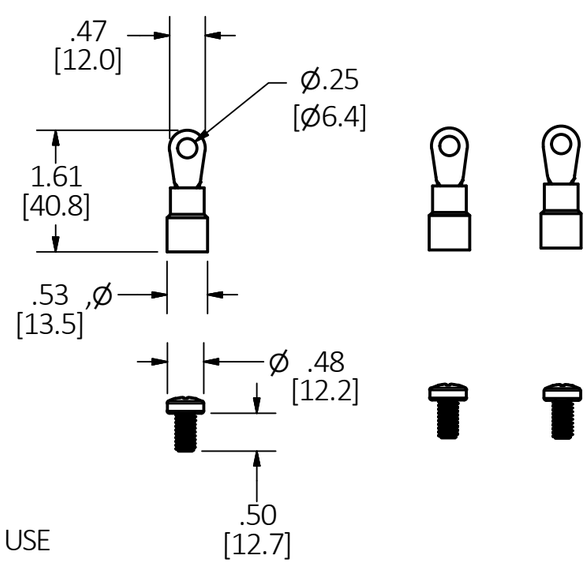

NOTES:
1. DIMENSION ARE IN INCHES (mm) AND ARE FOR REFERENCE ONLY.
2. cULus LISTED AND MEETS ESTA ANSI E1.24 STANDARD
3. RING TERMINAL PROVIDED FOR #6 AWG WIRE. FOR DIFFERENT WIRE SIZE, USE APPROPRIATE UL LISTED RING TERMINAL NOT PROVIDED.
4. RING TERMINAL THREAD: #1/4-20-UNC, RING TERMINAL TORQUE: 40 IN-LBS.
5. MOUNTING SCREWS: #1/4-20 x 1.25 NOT PROVIDED.

CAGE CODE 74545

LIST OF PARTS

DESCRIPTION	MATERIAL	FINISH
TOP	NYLON	BLACK
BOTTOM	NYLON	BLACK
MALE CONTACTS	BRASS	BRASS
ASSY SCREWS	STEEL	ZINC
RING TERMINAL	STEEL/NYLON	PLATED
TERMINAL SCREW	STEEL	ZINC

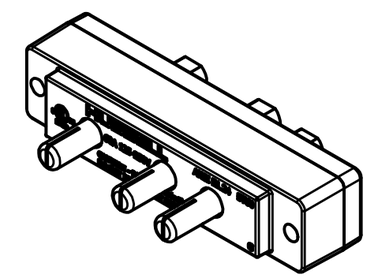

REV	DESCRIPTION	APP	DATE
1	ORIGINAL RELEASE PER DCN 23376	PFN	11/6/17

THE DESIGN AND DIMENSIONS OF THE PRODUCT SHOWN ON THIS DRAWING ARE SUBJECT TO CHANGE WITHOUT NOTICE. DIMENSIONS ARE IN INCHES [mm].

TITLE

60A STAGE PIN PANEL MOUNT RT MALE

WIRING DEVICE-KELLEMS
HUBBELL INCORPORATED
SHELTON, CT

TOLERANCES UNLESS OTHERWISE SPECIFIED
.XX = ± .01
.XXX= ± .005
ANGLE TOL. ±2°

DR. BY PFN
CHK. BY
SCALE 1 / 2
DATE 11/6/17

DIMENSION SHEET FOR CAT. NO.
HBL60SPMRRT

B

M-13770

1