M-13773 | 1

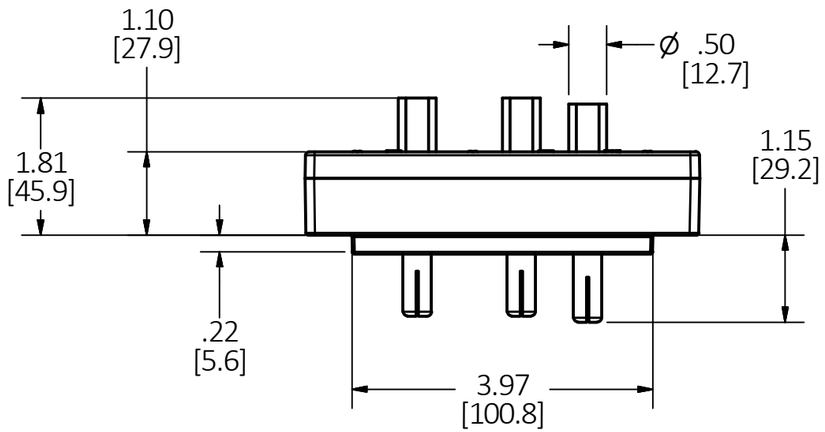

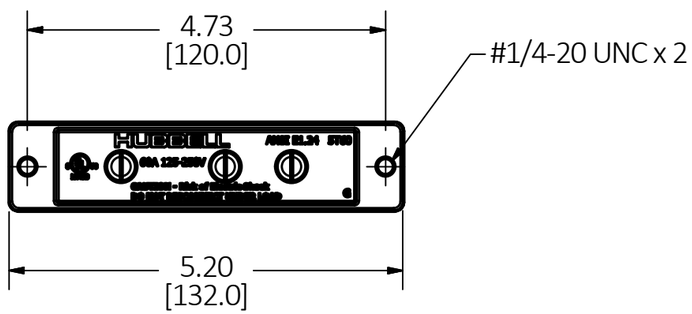

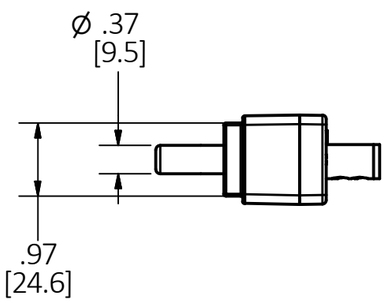

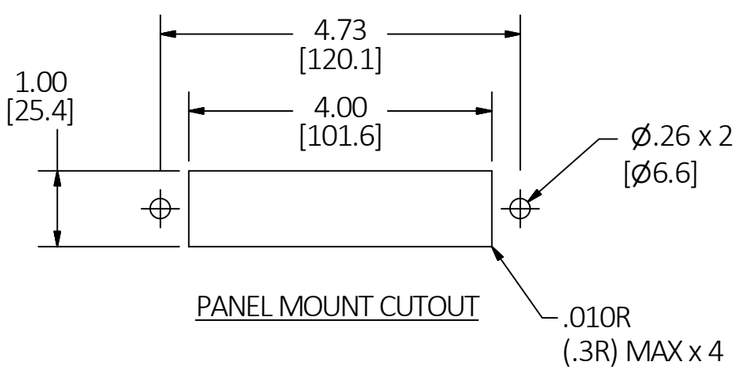

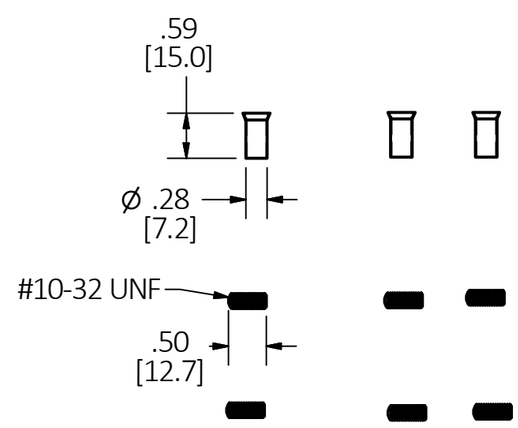

NOTES:
1. DIMENSION ARE IN INCHES (mm) AND ARE FOR REFERENCE ONLY.
2. cULus LISTED AND MEETS ESTA ANSI E1.24 STANDARD
3. WIRE RANGE: #4 AWG, #6 AWG.
4. FERRULE PROVIDED FOR #4 AWG WIRE. FOR DIFFERENT WIRE SIZE, USE APPROPRIATE UL LISTED FERRULE NOT PROVIDED.
5. SET SCREW TERMINAL TORQUE: 20 IN-LBS.
6. MOUNTING SCREWS: #1/4-20 x 1.25 NOT PROVIDED.

CAGE CODE 74545

LIST OF PARTS

DESCRIPTION	MATERIAL	FINISH
TOP	NYLON	BLACK
BOTTOM	NYLON	BLACK
MALE CONTACTS	BRASS	BRASS
ASSY SCREWS	STEEL	ZINC
FERRULES	TIN	TIN
SET SCREW	STAINLESS STEEL	PASSIVATED

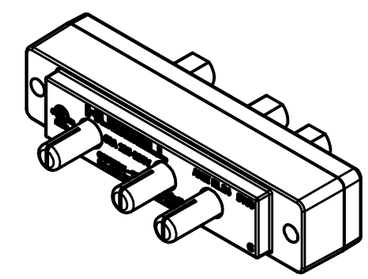

REV	DESCRIPTION	APP	DATE
1	ORIGINAL RELEASE PER DCN 23376	PFN	11/6/17

THE DESIGN AND DIMENSIONS OF THE PRODUCT SHOWN ON THIS DRAWING ARE SUBJECT TO CHANGE WITHOUT NOTICE. DIMENSIONS ARE IN INCHES [mm].

TITLE

60A STAGE PIN PANEL MOUNT DSS MALE

WIRING DEVICE-KELLEMS
HUBBELL INCORPORATED
SHELTON, CT

TOLERANCES UNLESS OTHERWISE SPECIFIED
.XX = ± .01
.XXX= ± .005
ANGLE TOL. ±2'

DR. BY	PFN	SCALE	1 / 2
CHK. BY		DATE	11/6/2017

DIMENSION SHEET FOR CAT. NO.
HBL60SPMR

B

M-13773

1