M-3085

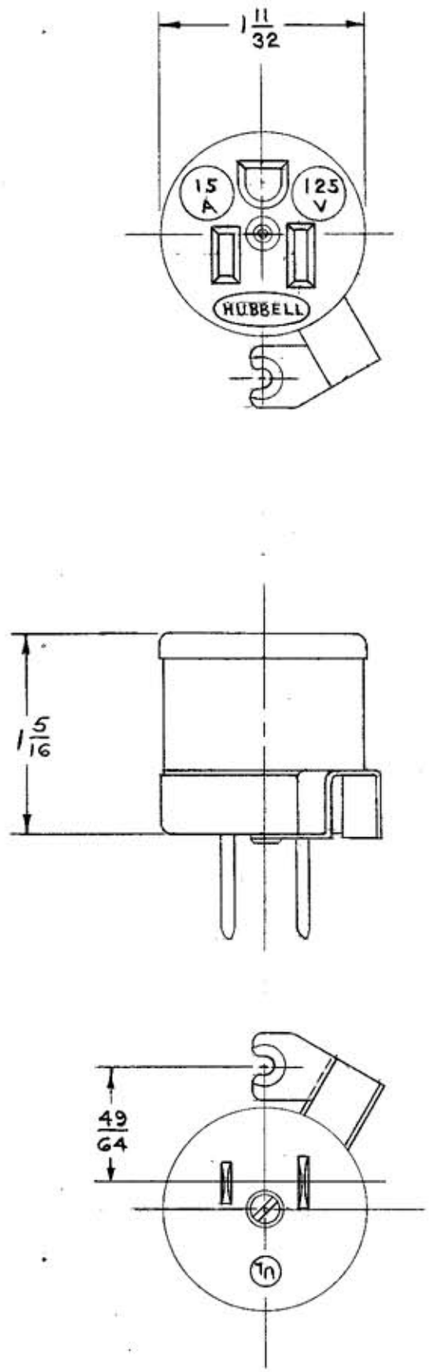

LIST OF PARTS		
DESCRIPTION	MATERIAL	FINISH
BODY	NYLON	NATURAL
BASE	NYLON	NATURAL
CONTACT SPRINGS	BRONZE	
CONTACT BLADES	.060 BRASS	
GROUNDING PLATE	.025 BRASS	
GR. CONTACT SPR.	.050 BRASS	
RIVETS	BRASS	
DRIVE SCREW	STEEL	ZINC PL.

SYM	REVISIONS	APP	DATE

SUPERSEDES DWG. DATED 4-9-56

DIMENSION SHEET FOR CAT. NO. 5273-L

REPAIRABLE ☐ NON-REPAIRABLE ☒

B

M-3085

TITLE
15A. 125V. THREE-WIRE GROUNDING ADAPTER WITH GROUNDING LUG

TOLERANCES UNLESS OTHERWISE SPECIFIED
FRACTIONS ± 1/64
DECIMALS ± .005
ANGLES ± 2°

HARVEY HUBBELL, INC.
BRIDGEPORT, CONN.

DR. BY C.J.G.	APP. BY
TR. BY	SCALE FULL
CHK'D. BY	DATE 5-29-75

CODE 74545