M-5310 | 6

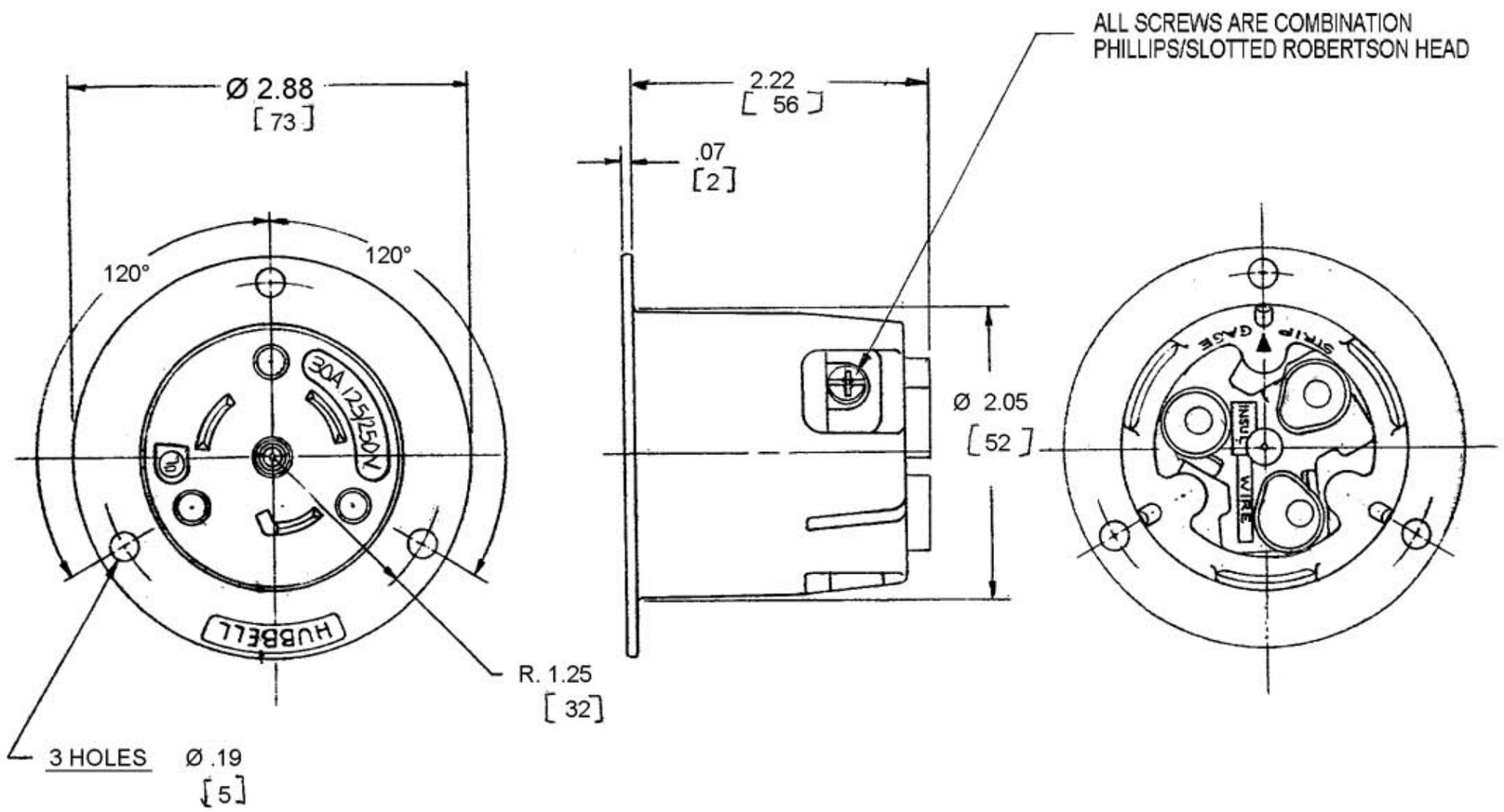

LIST OF PARTS

DESCRIPTION	MATERIAL	FINISH
CASING	NYLON	NATURAL
RETAINER	POLYCARBONATE	CLEAR
DRIVE SCREW	STEEL	ZINC PLATE
BLADES	.070 BRASS	
TERMINAL SCREWS	BRASS	1-WHITE
		2- BRASS
WIRE CLAMP	.080 STEEL	NICKEL PLATE
BLADE HOLDER	NYLON	NATURAL

SYM	REVISIONS	APP	DATE
6	RETAINER MAT. POLY. WAS LEXAN REVISED SCREW NOTE, ADDED HBL SUFFIX TO CAT NO. PER DCN8996 MYA	CJC	10/12/01
5	NUMEROUS CHANGES, SEE RECORD PRINT PER DCN #4114. DJG	JZ	6-8-96
4	REVISED VIEW OF BLADE HOLDER TO AGREE WITH DETAIL RDK.	WLH	9-19-94
3	DIM. 2 7/32 WAS 2" DIM. 2 3/64 WAS 2 1/16, ADDED FUNNELS WIRE CLAMP WAS ZINC PL. AJL	CJC	1-20-92
2	CASING MAT'L WAS LEXAN AJL		4-2-76
1	CASING WAS GRAY		7-6-72
	RETAINER WAS BLACK		
	CAT. NO. WAS 3335-C		

THE DESIGN AND DIMENSIONS OF THE PRODUCT SHOWN ON THIS DRAWING ARE SUBJECT TO CHANGE WITHOUT NOTICE

TITLE 30A 125/250V 3P- 3W TWISTLOCK FLANGED INLET NON-NEMA

TOLERANCES UNLESS OTHERWISE SPECIFIED
FRACTIONS ±1/64
DECIMALS ±.005
ANGLES ±2°

WIRING DEVICE-KELLEMS
HUBBELL INCORPORATED
BRIDGEPORT, CT

DR. BY KHF	APP. BY
TR. BY	SCALE FULL
CHK'D BY	DATE 7-29-71

DIMENSION SHEET FOR CAT. NO. HBL3334-C

REPAIRABLE ☐ NON-REPAIRABLE ☒

B

M-5310

6

CODE 74545