M-5348 | 2

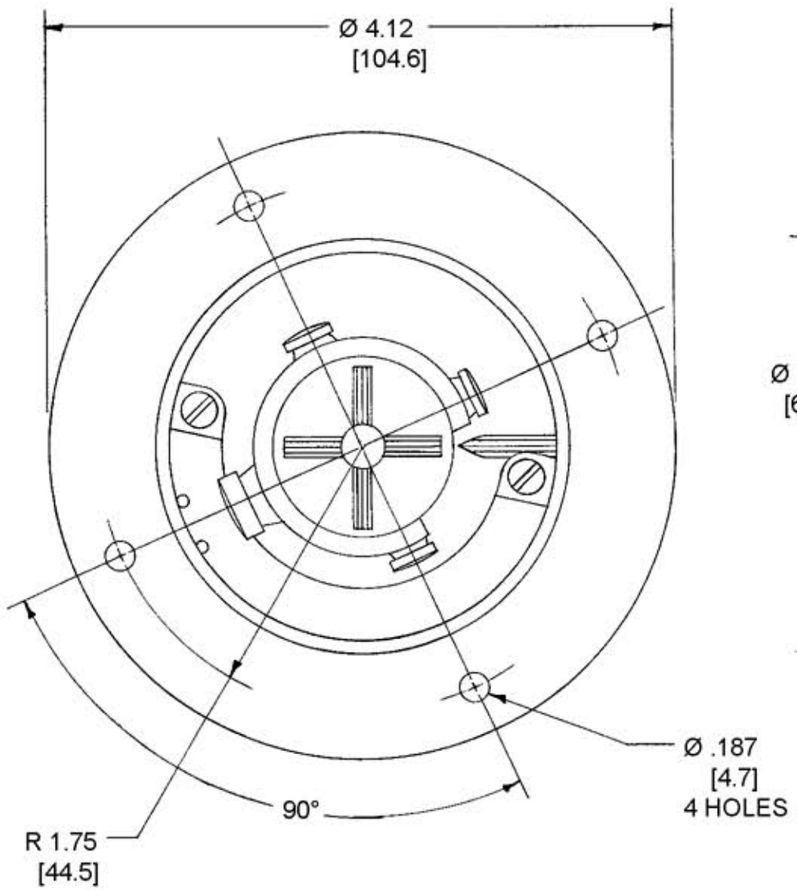

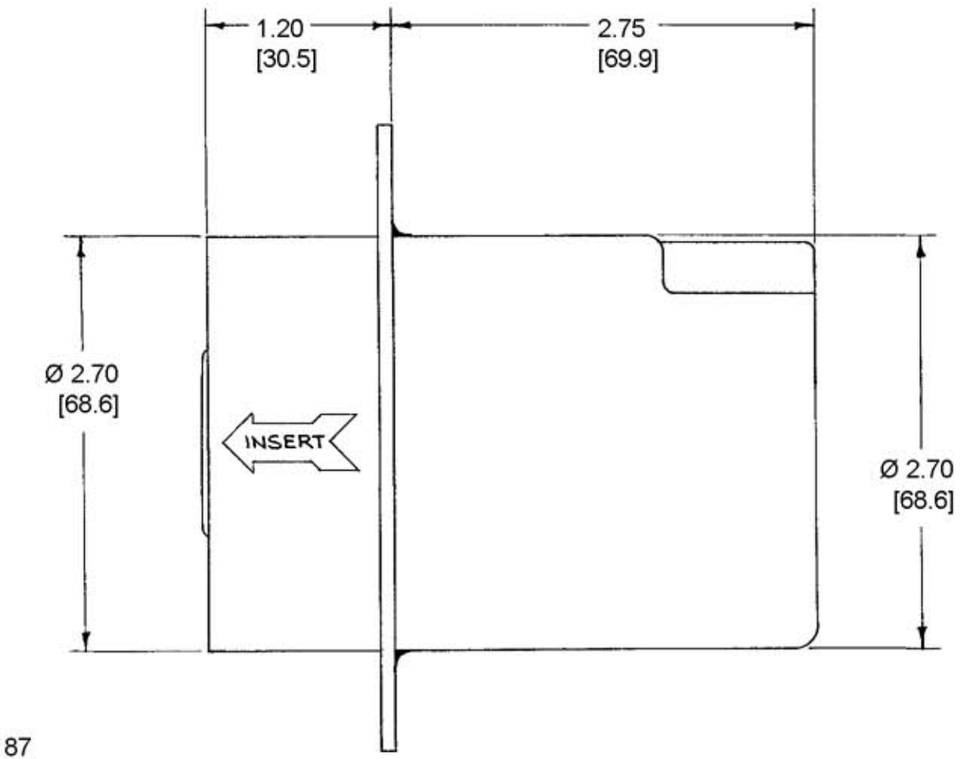

NOTES:
1. WIRE CAPACITY: #6AWG TO #2AWG, SOLID OR STRANDED COPPER WIRE ONLY.
2. ALL DIMS. TO BE INCHES.
[mm]

LIST OF PARTS

DESCRIPTION	MATERIAL	FINISH
INSULATORS	DUREZ	BLACK
COVER	.062 STEEL	ZINC. PL.
CONTACTS	BRASS	
CLAMPS	ALUMINUM	WHITE
CLAMP SCREWS	STEEL	ZINC PL.
FLANGE	.078 C.R.S.	YELLOW
GR. SHUNT	.031 BRASS	

SYM	REVISIONS	APP	DATE
2	ADDED NOTES 1&2;"HBL26422" WAS "26422"; CONERTED ALL DIMS. TO DECIMAL & METRIC PER DCN 11902 RCM	JPP	2/5/05
1	CAT. NO. WAS AE-16469 KF		6-8-76

DIMENSION SHEET FOR CAT. NO. HBL26422

REPAIRABLE ☐ NON-REPAIRABLE ☒

B

M-5348

2

TITLE
60A 600VAC, 3 POLE, 4 WIRE
GROUNDING HUBBELLOCK
FLANGED INLET

TOLERANCES UNLESS OTHERWISE SPECIFIED
FRACTIONS ± 1/64
DECIMALS ± .005
ANGLES ± 2°

HARVEY HUBBELL, INC.
BRIDGEPORT, CONN.

DR. BY E.P.S.	APP. BY
TR. BY	SCALE FULL
CHK'D. BY	DATE 8-16-71

CODE 74545