M-5689 2

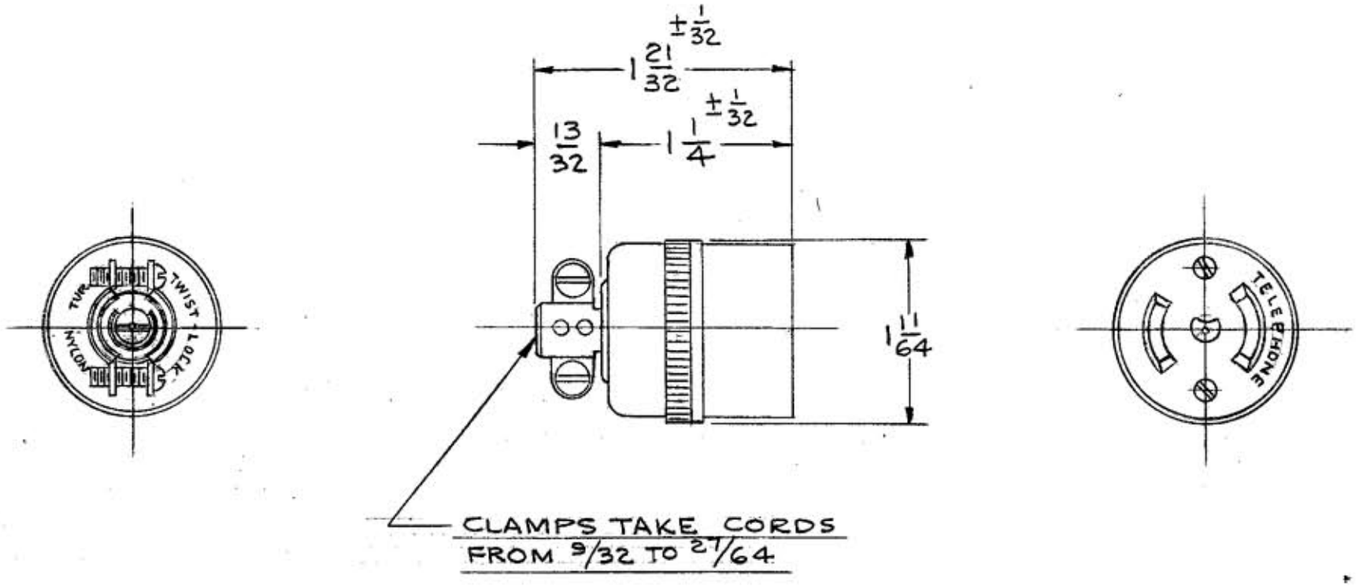

LIST OF PARTS		
DESCRIPTION	MATERIAL	FINISH
BODY	NYLON	BLACK
BASE	NYLON	BLACK
CONT. SP. BIND. PL.	.031 BRONZE	NICKEL PL.
CUPPED WASHER	.025 BRASS	NICKEL PL.
INSULATOR	.031 NYLON	
BINDING SCREWS	BRASS	NICKEL PL.
CORD CLAMPS	.040 BRASS	NICKEL PL.
BARRIER	NYLON	BLACK

SYM	REVISIONS	APP	DATE
2	CAT. NO. WAS 7884 ADD.	JCH	4-10-75
1	CAT. NO. WAS 7886	JCH	2-5-74

DIMENSION SHEET FOR CAT. NO. PH-6624

REPAIRABLE ☐ NON-REPAIRABLE ☒

B

M-5689

2

TITLE 3 WIRE TWIST-LOCK TELEPHONE CONNECTOR

TOLERANCES UNLESS OTHERWISE SPECIFIED
FRACTIONS ± 1/64
DECIMALS ± .005
ANGLES ± 2°

HARVEY HUBBELL, INC.
BRIDGEPORT, CONN.

DR. BY A. J. L.	APP. BY
TR. BY	SCALE FULL
CHK'D. BY	DATE 6-18-72

CODE 74545