M-6277 | 2

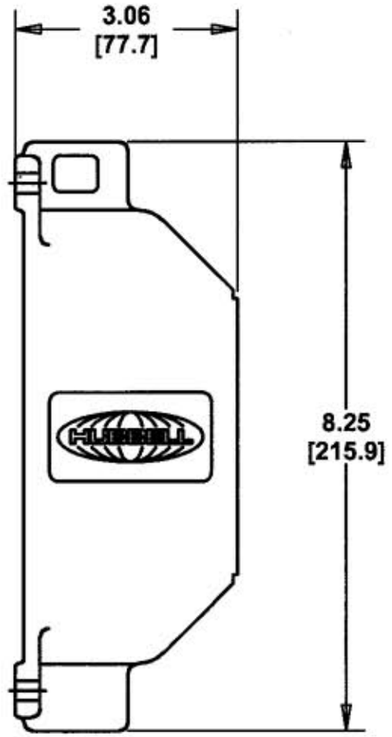

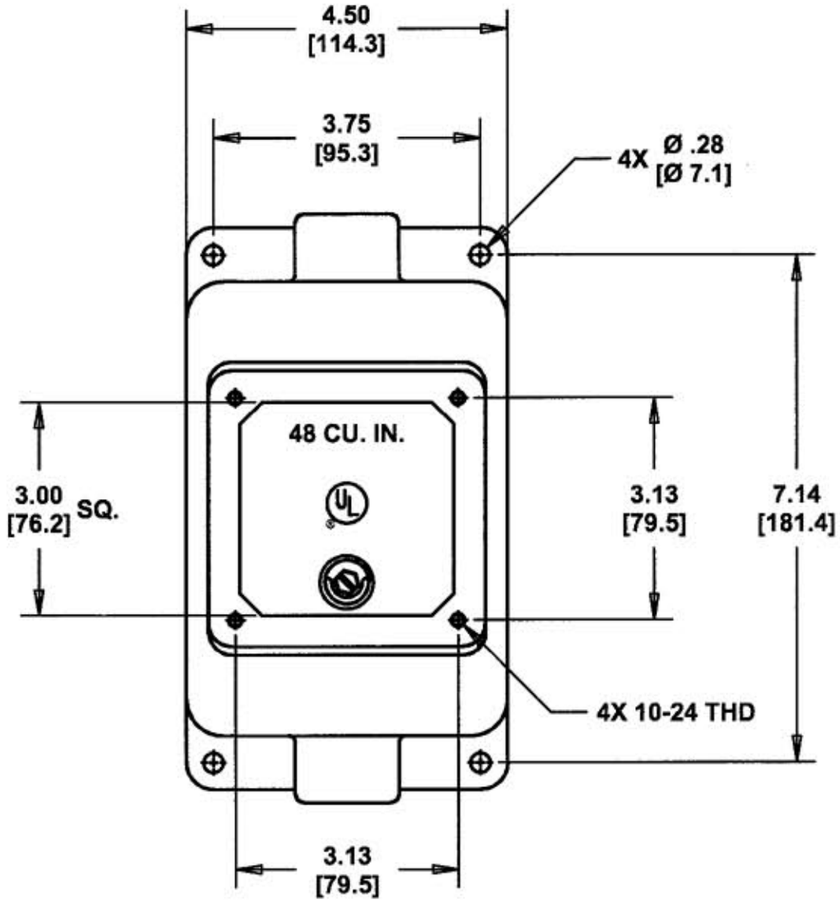

CAT. NO.	TAP SIZE
FT202W	¾-14 NPT
FT302W	1-11½ NPT

NOTES (UNLESS OTHERWISE SPECIFIED)
1) TOLERANCES ARE:
DECIMALS ± .03
ANGLES ± 2°
2) DIMENSIONS ARE: INCHES
[MILLIMETERS]

CODE 74545

LIST OF PARTS

DESCRIPTION	MATERIAL	FINISH
BOX	CAST ALUMINUM	GRAY PAINT
SCREW	STEEL	GREEN

SYM	REVISIONS	APP	DATE
2	REDRAWN ON CAD WITH CHANGES. ADDED SCREW TO LIST OF PARTS, NOTES 1 & 2, AND METRIC DIM.'S. THREE-PLACE DIM.'S MADE TWO-PLACE. DRAWING SCALE 1:2 WAS "HALF". SUPERSEDES DWG. DATED 10/28/81 PER DCN #12944. JMN	DJP	6/29/06

THE DESIGN AND DIMENSIONS OF THE PRODUCT SHOWN ON THIS DRAWING ARE SUBJECT TO CHANGE WITHOUT NOTICE

TITLE
20 - 30A 4 FEED THRU BACK BOX

TOLERANCES UNLESS OTHERWISE SPECIFIED
FRACTIONS ± 1/64
DECIMALS ± .005
ANGLES ± 2°

WIRING DEVICE–KELLEMS
HUBBELL INCORPORATED
BRIDGEPORT, CT

DR. BY	P.M.	APP. BY	DJP
TR. BY	JMN	SCALE	1:2
CHK'D BY	DJP	DATE	6/29/06

DIMENSION SHEET FOR CAT. NO. SEE TABLE

REPAIRABLE ☐ NON-REPAIRABLE ☒

B

M-6277

2