M-6342 | 3

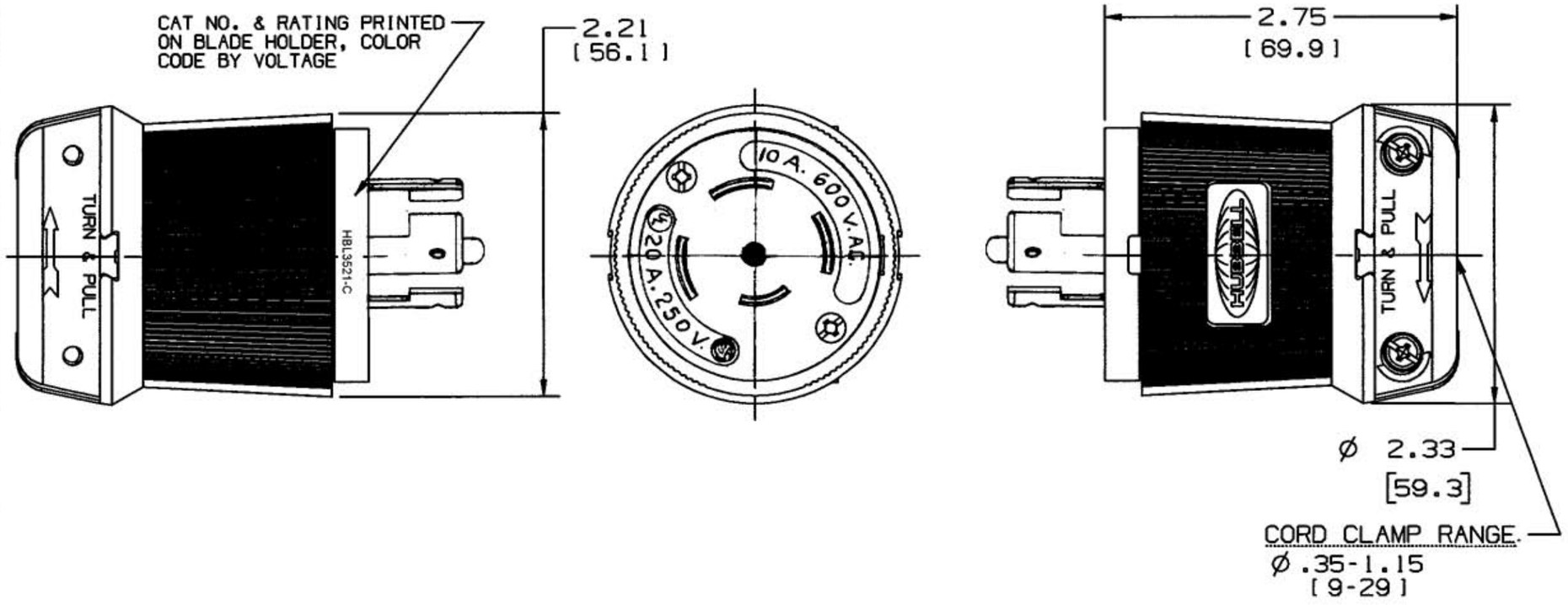

LEGEND:
IN.
[mm]

NOTES:

1. ALL SCREWS ARE COMBINATION PHILLPS/SLOTTED/ROBERTSON HEAD.
2. > INDICATES EVALUATED BY UL IN ACCORDANCE WITH IEC 309-1

LIST OF PARTS

DESCRIPTION	MATERIAL	FINISH
BLADE HOLDER	NYLON	NATURAL
RETAINER	POLY CARBONATE	CLEAR
COVER	NYLON	BLACK
WIRE CLAMPS	.080 C.R.S.	NICKEL PLATE
BLADES	.060 BRASS	
TERMINAL SCREWS	BRASS	**
GROUND PIN	BRASS	
CENTER TERMINAL	BRASS	GREEN
CORD CLAMPS	NYLON	NATURAL

**
WHITE- NEUTRAL
BRASS- LINE (3)

SYM	REVISIONS	APP	DATE
4	UPDATED VIEWS, RETAINER MAT. POLY WAS LEXAN, ADDED HBL SUFFIX TO CAT. NO. PER DCN 8996 MYA	CJC	10/16/01
3	NUMEROUS CHANGES, SEE RECORD PRINT PER DCN 4114. DJG	JZ	6-13-96
2	TABLE ADDED PER DCN 2941	[illegible]	8-26-94
1	[illegible] DIM. WAS 2", 2 1/4 DIM. WAS 29/32 ADDED "UL" & C.S.A. MARKING	[illegible]	3-9-90 AJL

THE DESIGN AND DIMENSIONS OF THE PRODUCT SHOWN ON THIS DRAWING ARE SUBJECT TO CHANGE WITHOUT NOTICE

TITLE 20A 250V. A.C. OR D.C. 10A. 600V. A.C.
4 POLE 5 WIRE TWIST-LOCK PLUG
NON-NEMA

~~TOLERANCES UNLESS OTHERWISE SPECIFIED~~
~~FRACTIONS ± 1/64~~
~~DECIMALS ± .005~~
~~ANGLES ± 2°~~

WIRING DEVICE-KELLEMS
HUBBELL INCORPORATED
BRIDGEPORT, CT

DR. BY A.J.L.	APP. BY
TR. BY	SCALE FULL
CHK'D BY	DATE 3/22/83

DIMENSION SHEET FOR CAT. NO. HBL3521-C

REPAIRABLE ☐ NON-REPAIRABLE ☒

B

M-6342

4

CODE 74545