M-6345 | 2

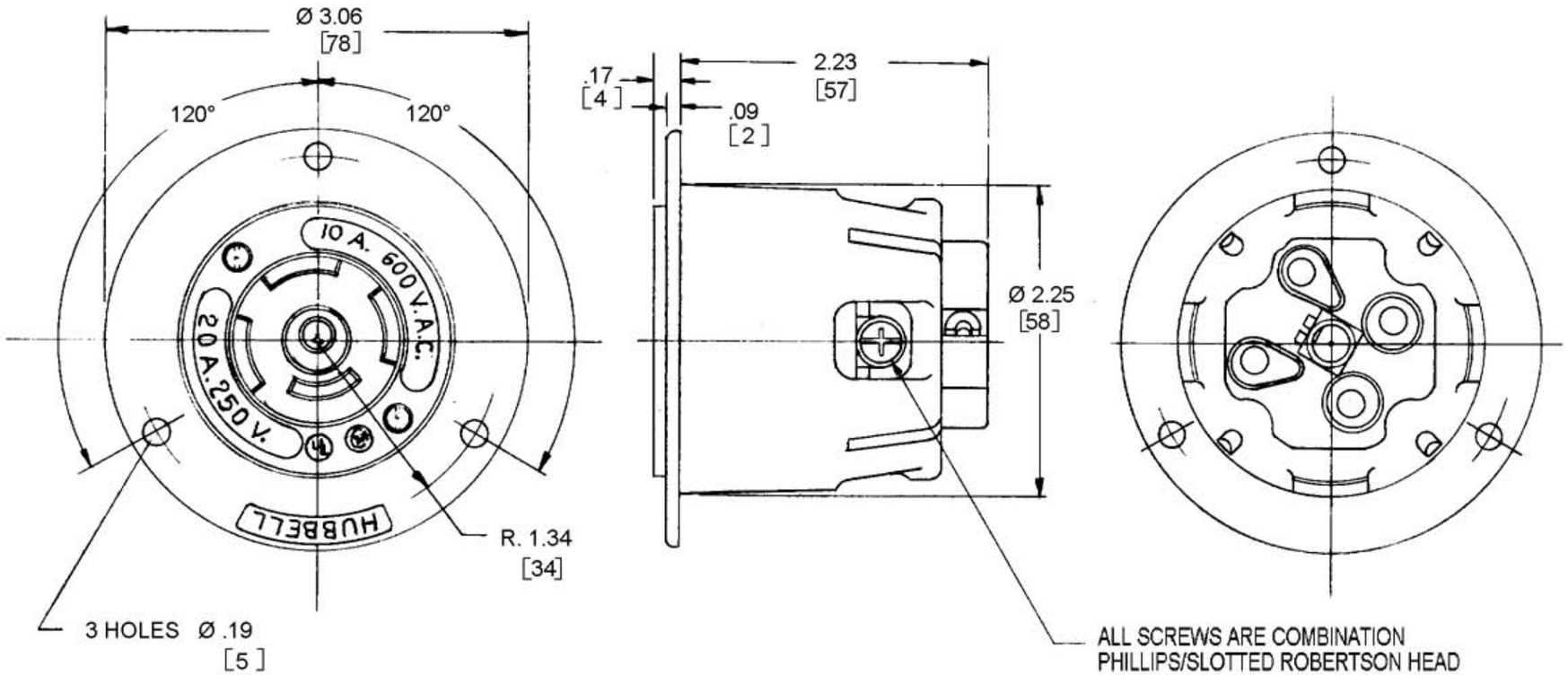

LIST OF PARTS

DESCRIPTION	MATERIAL	FINISH
BODY	NYLON	NATURAL
RETAINER	POLY CARBONATE	CLEAR
CASING	NYLON	NATURAL
WIRE CLAMPS	.080 C.R.S.	NICKEL PLATE
CONTACT SPRINGS	.031 BRASS	
GND CONTACT SPRING	BRASS	
GND TERMINAL	BRASS	GREEN
TERMINAL SCREWS	BRASS	3- BRASS
		1- WHITE

SYM	REVISIONS	APP	DATE
2	REVISED SCREW NOTE, RETAINER MAT. POLY WAS LEXAN, ADDED HBL SUFFIX TO CAT. NO PER DCN 8996 MYA	CJC	10/22/01
1	NUMEROUS CHANGES, SEE RECORD PRINT PER DCN 4114, DJS	JZ	6-14-96

THE DESIGN AND DIMENSIONS OF THE PRODUCT SHOWN ON THIS DRAWING ARE SUBJECT TO CHANGE WITHOUT NOTICE

TITLE 20A 250V A.C. OR D.C. 10A 600V A.C.
4 POLE 5 WIRE TWIST-LOCK
FLANGED RECEPTACLE
NON- NEMA

TOLERANCES UNLESS OTHERWISE SPECIFIED
FRACTIONS ±1/64
DECIMALS ±.005
ANGLES ±2°

WIRING DEVICE-KELLEMS
HUBBELL INCORPORATED
BRIDGEPORT, CT

DR. BY A.J.L.	APP. BY
TR. BY	SCALE FULL
CHK'D BY	DATE 3/22/83

DIMENSION SHEET FOR CAT. NO. HBL3525-C

REPAIRABLE ☐ NON-REPAIRABLE ☒

B

M-6345

2

CODE 74545