M-7804 2

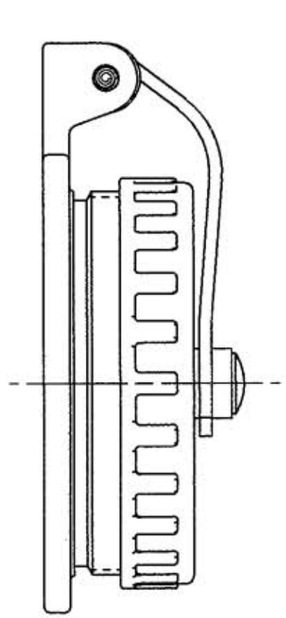

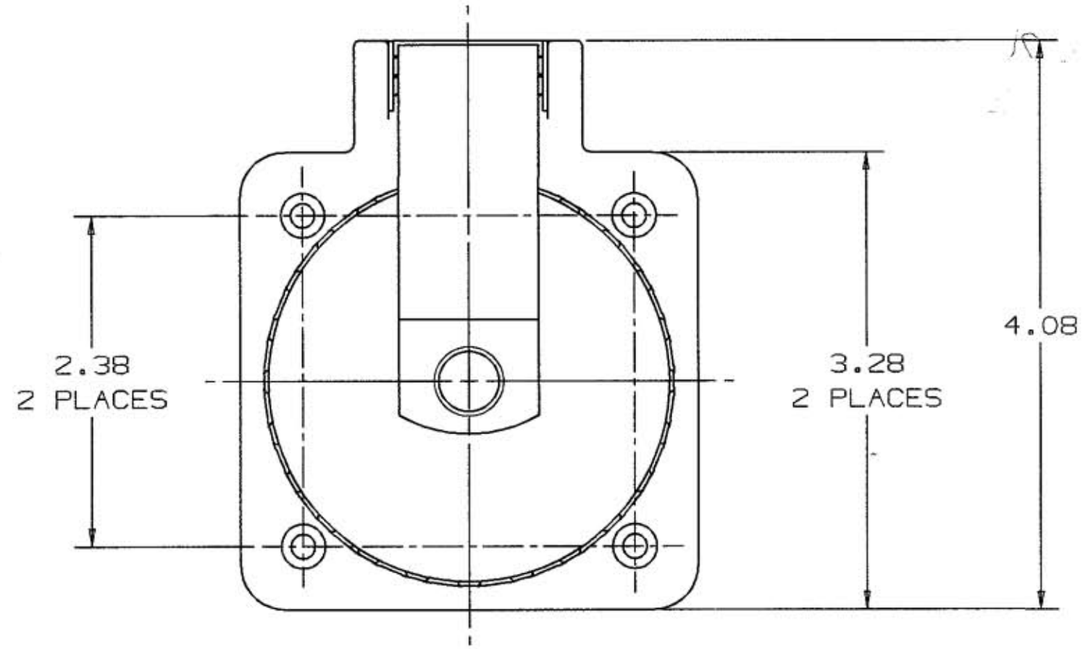

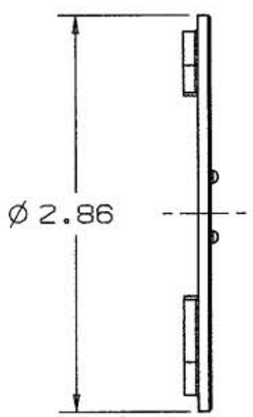

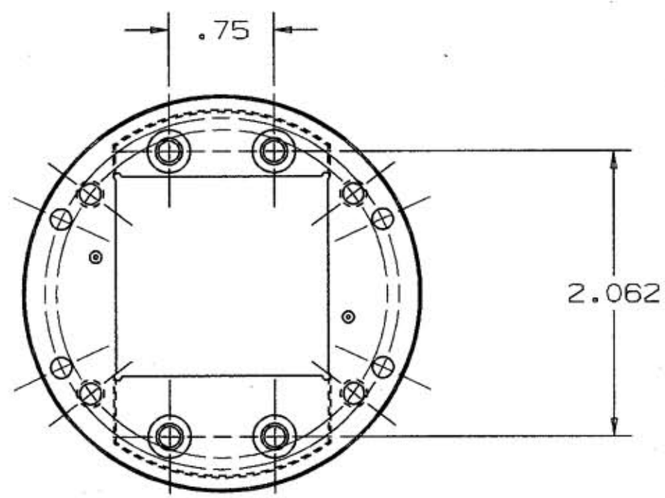

LIST OF PARTS

DESCRIPTION	MATERIAL	FINISH
INLET COVER & FLANGE ASSY	316 SS	
C.B. ADAPTER PLATE	NYLON	
SCREWS	STAINLESS STL.	
GASKETS	NEOPRENE	

SYM	REVISIONS	APP	DATE
2	2.38 WAS 2.41; 4 HOLES WAS 4 SLOTS PER DCN #5904 RCM	WUH	4/14/98
1	RELEASED PER DCN 5337	WUH	11/14/97

THE DESIGN AND DIMENSIONS OF THE PRODUCT SHOWN ON THIS DRAWING ARE SUBJECT TO CHANGE WITHOUT NOTICE

TITLE
STAINLESS STEEL
MAIN CIRCUIT BREAKER
HULL INLET

TOLERANCES UNLESS OTHERWISE SPECIFIED
FRACTIONS ± 1/64
DECIMALS ± .005
ANGLES ± 2°

WIRING DEVICE-KELLEMS
HUBBELL INCORPORATED
BRIDGEPORT, CT

DR. BY SRE | APP. BY WUH
TR. BY | SCALE 1:1
CHK'D BY WUH | DATE 9/15/97

DIMENSION SHEET FOR CAT. NO.

REPAIRABLE ☐ NON-REPAIRABLE ☒

B

M-7804

N

CODE 74545