M-7962 | 3

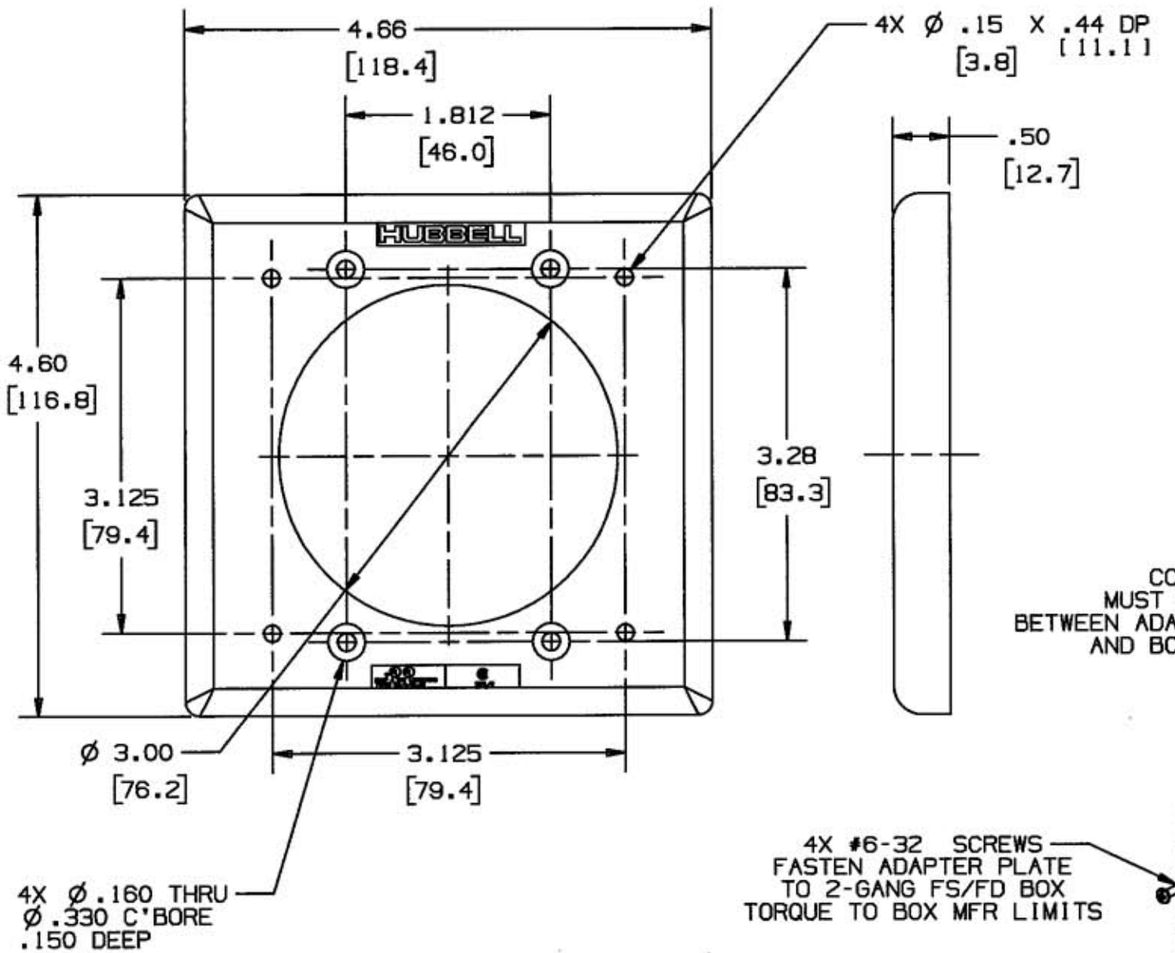

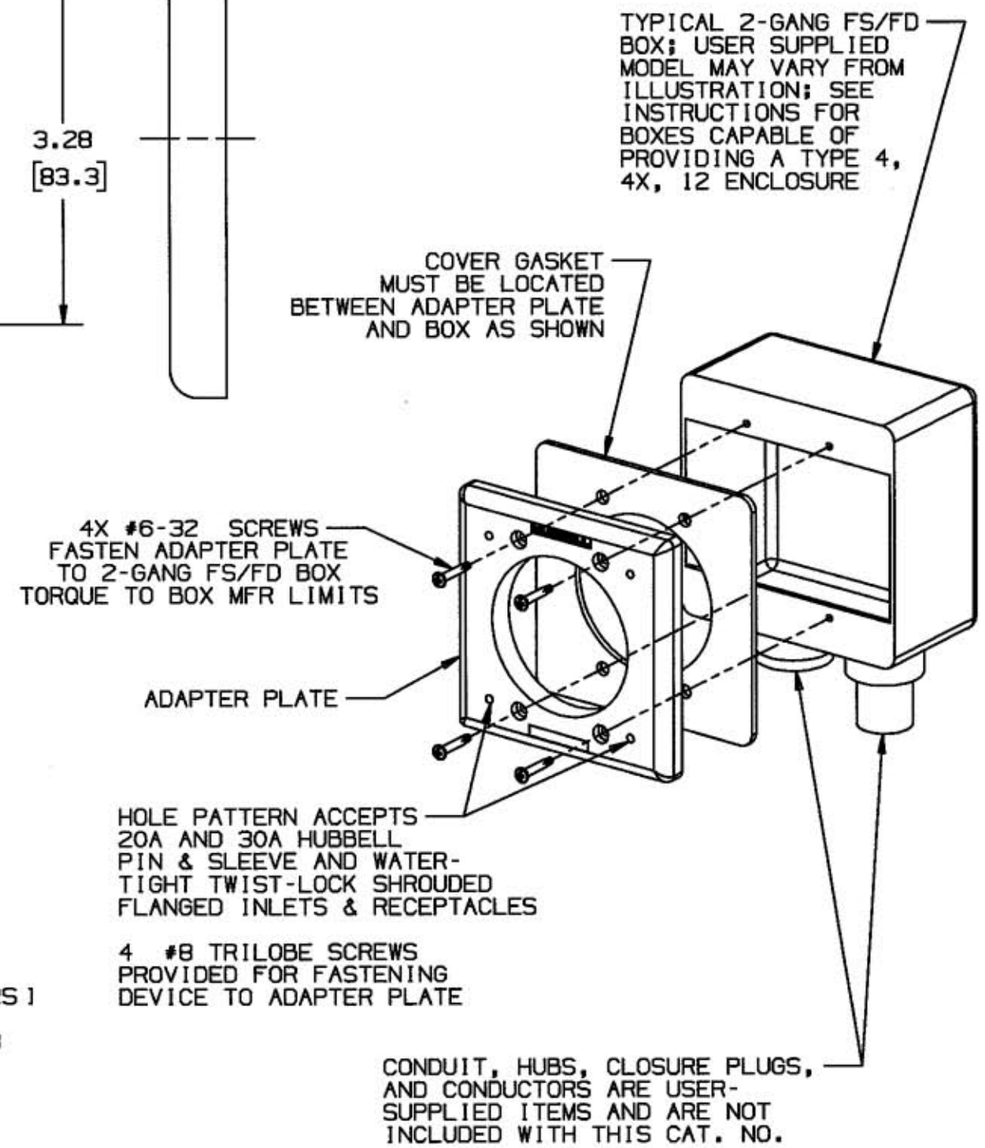

NOTES: (UNLESS OTHERWISE SPECIFIED)

1) DIMENSIONS ARE: INCHES [MILLIMETERS]

2) .XX TOLERANCES TO BE ± .03

CODE 74545

LIST OF PARTS

DESCRIPTION	MATERIAL	FINISH
ADAPTER PLATE	PBT	GRAY
GASKET	NEOPRENE	BLACK
SCREW #6-32	STN STL	
SCREW, DEVICE MTG	STN STL	

SYM	REVISIONS	APP	DATE
3	ADDED NOTE 2 & NUMBER TO NOTE 1 PER DCN #12944. JMN	DJP	7/11/06
2	ADDED VIEWS OF COVER & DIMS; CONVERTED DIMS. TO INCHES/MM;REVISED NOTES PER DCN 8685 RCM	TCM	11/19/01
1	RELEASED PER DCN 6066	MDM	4/28/98

THE DESIGN AND DIMENSIONS OF THE PRODUCT SHOWN ON THIS DRAWING ARE SUBJECT TO CHANGE WITHOUT NOTICE

TITLE
ADAPTER PLATE
WATERTIGHT

TOLERANCES UNLESS OTHERWISE SPECIFIED
FRACTIONS ±1/64
DECIMALS ±.005
ANGLES ±2°

WIRING DEVICE-KELLEMS
HUBBELL INCORPORATED
BRIDGEPORT, CT

DR. BY MDM | APP. BY MDM
TR. BY | SCALE NONE
CHK'D BY MDM | DATE 4/28/98

DIMENSION SHEET FOR CAT. NO. HBL2030AP

REPAIRABLE ☐ NON-REPAIRABLE ☒

B

M-7962

3