M-8697 1

NOTE
1. DIMENSIONS: INCHES (MM).

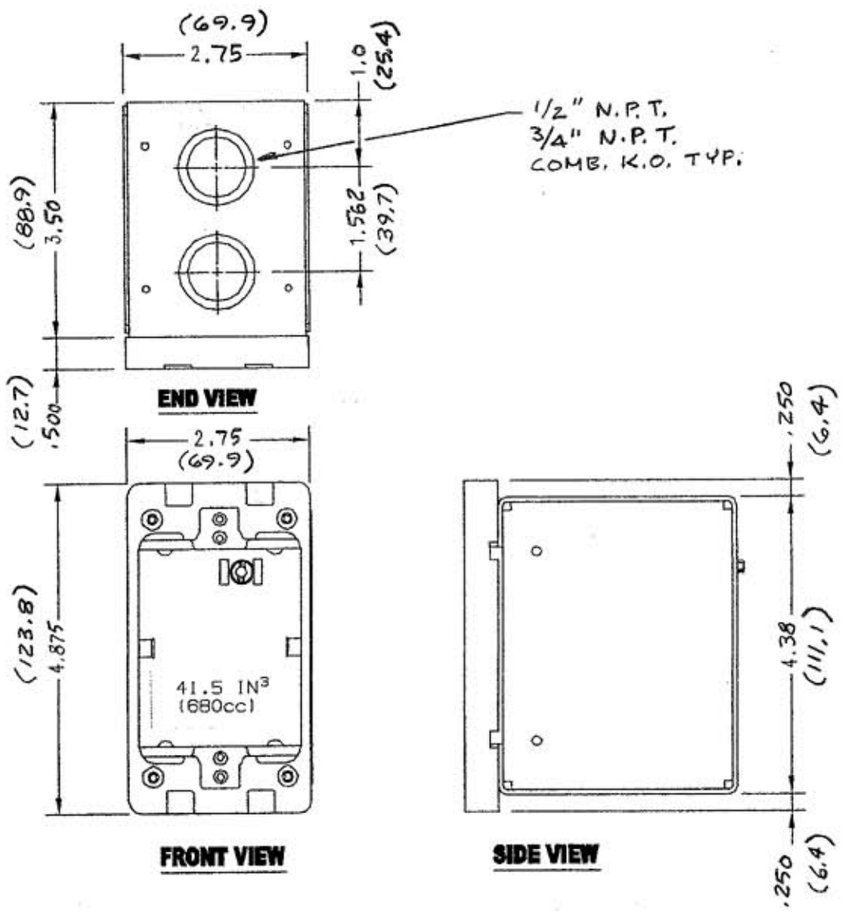

LIST OF PARTS		
DESCRIPTION	MATERIAL	FINISH
WALL BOX	16G STEEL	PRE-GALV.
MOUNTING BKT.	PVC	
GRD. SCREW #10-32 COMB. HD.	STEEL	GREEN

SYM	REVISIONS	DATE
1	RELEASE FOR PRODUCTION DCN#9281 PAC JVP	2/12/02

THE DESIGN AND DIMENSIONS OF THE PRODUCT SHOWN ON THIS DRAWING ARE SUBJECT TO CHANGE WITHOUT NOTICE

TITLE
RECESS WALL BOX 1-G
MBD DEEP

TOLERANCES UNLESS OTHERWISE SPECIFIED
FRACTIONS ±1/64
DECIMALS ±.005
ANGLES ±2°

WIRING DEVICE-KELLEMS
HUBBELL INCORPORATED
BRIDGEPORT, CT

DR. BY PAC	APP. BY
TR. BY	SCALE NTS
CHK'D BY	DATE 2/12/02

DIMENSION SHEET FOR CAT. NO. HBLWSCS1MBD

REPAIRABLE ☐ NON-REPAIRABLE ☐

B

M-8697

1

CODE 74545