M-8805 | 1

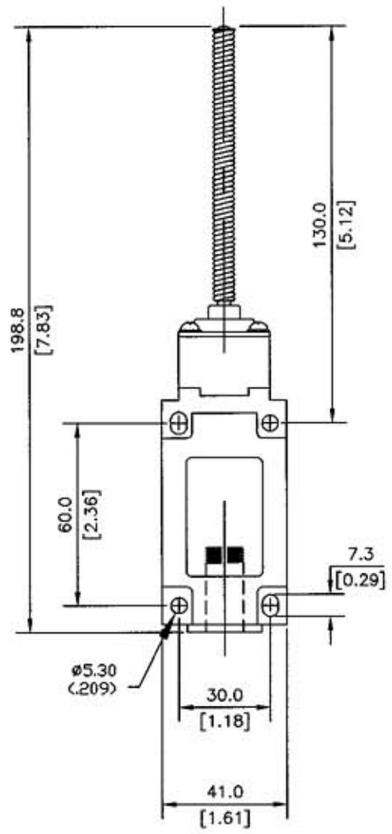

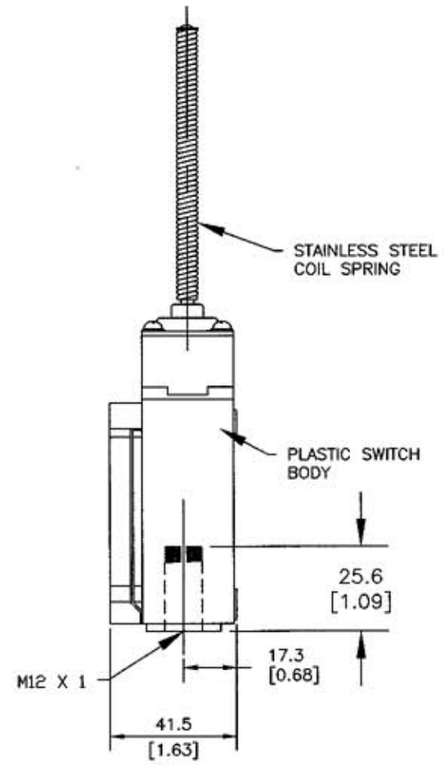

UNLESS OTHERWISE SPECIFIED DIMENSIONS ARE IN mm (INCHES)

CODE 74545

LIST OF PARTS

DESCRIPTION	MATERIAL	FINISH

SYM	REVISIONS	APP	DATE
1	5/3/02 "X" REMOVED; LAST "X" REVISION WAS X-0. RELEASED FOR PRODUCTION PER DCN #9320. GDR MJL	MJL	5/23/02

THE DESIGN AND DIMENSIONS OF THE PRODUCT SHOWN ON THIS DRAWING ARE SUBJECT TO CHANGE WITHOUT NOTICE

TITLE
LIMIT SWITCH WITH COIL SPRING

TOLERANCES UNLESS OTHERWISE SPECIFIED
FRACTIONS ±1/64
DECIMALS ±.005
ANGLES ±2°

WIRING DEVICE–KELLEMS
HUBBELL INCORPORATED
BRIDGEPORT, CT

DR. BY GDR	APP. BY
TR. BY	SCALE NONE
CHK'D BY	DATE 5/3/02

DIMENSION SHEET FOR CAT. NO. SSLS1TCS

REPAIRABLE ☐ NON-REPAIRABLE ☒

B

M-8805

1