M-8916 | 2

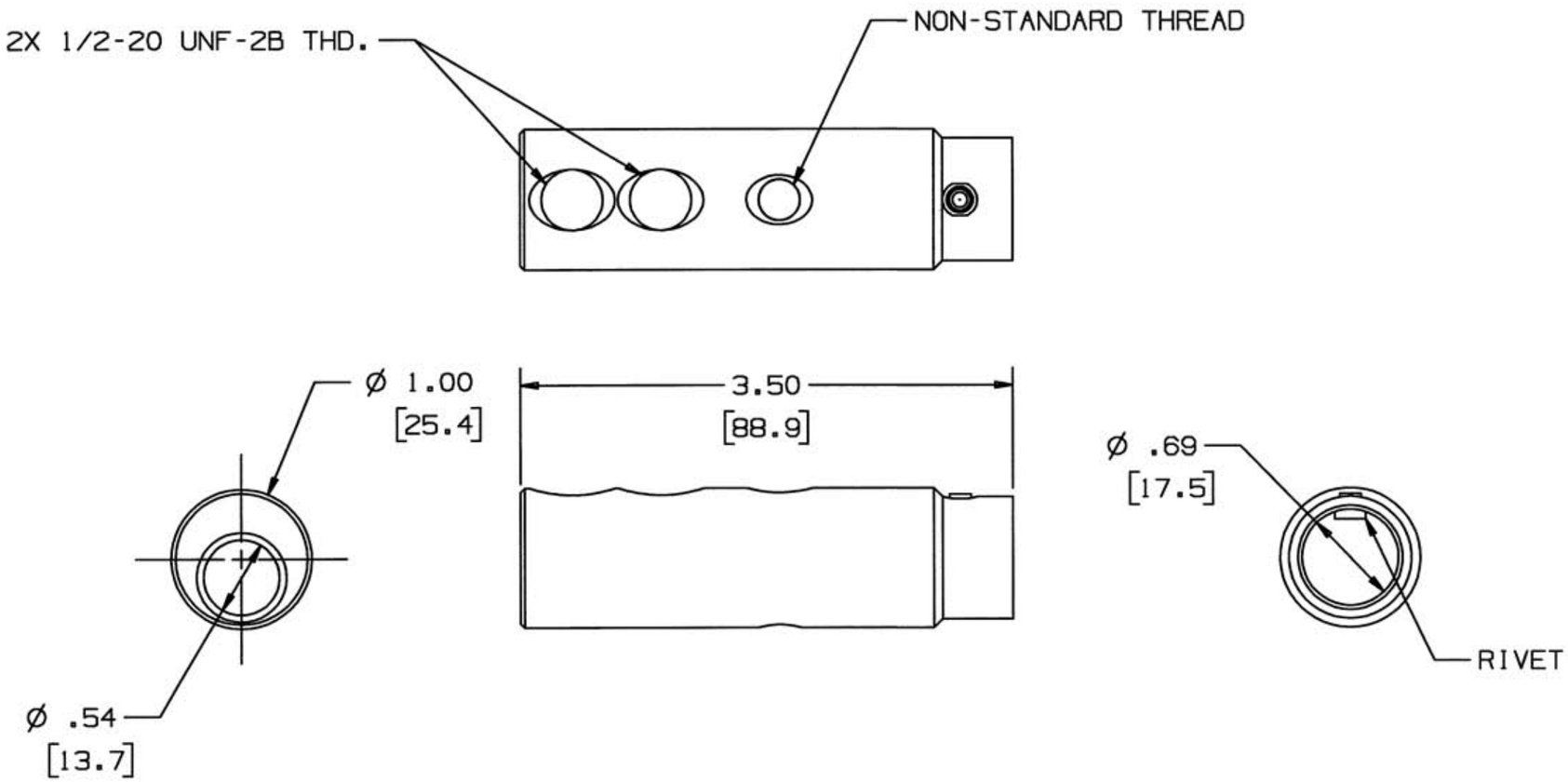

NOTES:
1. DIMENSIONS ARE INCHES ±.02
[mm] ±.5
2. 300A MAX. CABLE SIZE: #4 AWG - 2/0, COPPER ONLY

CODE 74545

LIST OF PARTS

DESCRIPTION	MATERIAL	FINISH
CONTACT	BRASS	
RIVET	BRASS	

SYM	REVISIONS	APP	DATE
2	DIM Ø .54 [13.7] WAS Ø .58 [14.7] ADD ±.02 & ±.5 TO NOTE 1 PER DCN 11484 TwB	TwB	12/15/04
1	RELEASED PER DCN 10992 MJM TB	TwB	6/26/03

THE DESIGN AND DIMENSIONS OF THE PRODUCT SHOWN ON THIS DRAWING ARE SUBJECT TO CHANGE WITHOUT NOTICE

TITLE
300A FEMALE CONTACT

TOLERANCES UNLESS OTHERWISE SPECIFIED
FRACTIONS ±1/64
DECIMALS ±.005
ANGLES ±2°

WIRING DEVICE-KELLEMS
HUBBELL INCORPORATED
BRIDGEPORT, CT

DR. BY MJM | APP. BY
TR. BY | SCALE 1:1
CHK'D BY | DATE 6/11/03

DIMENSION SHEET FOR CAT. NO.
HBL300RCF

REPAIRABLE ☐ NON-REPAIRABLE ☒

B

M-8916

2