M-9565 | 2

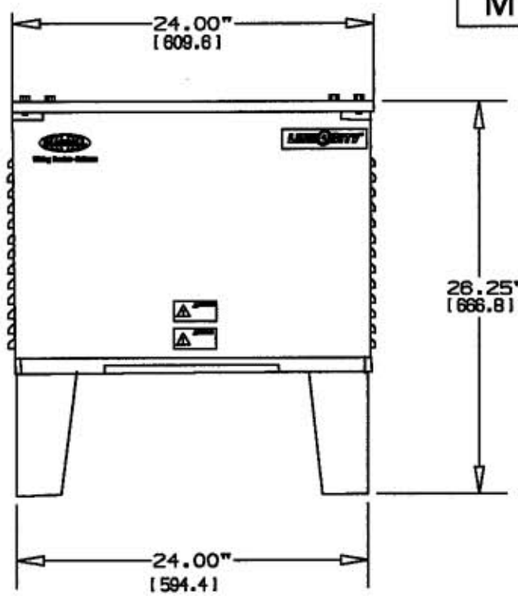

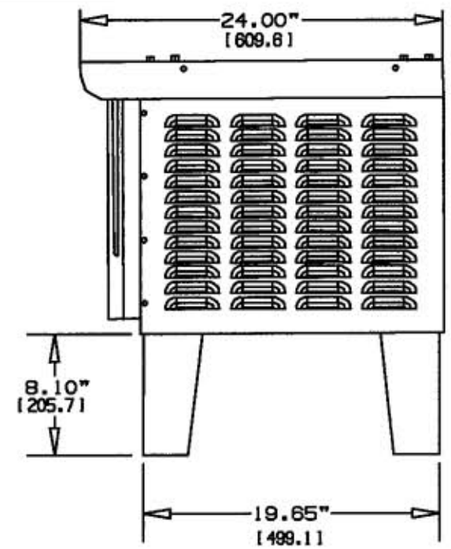

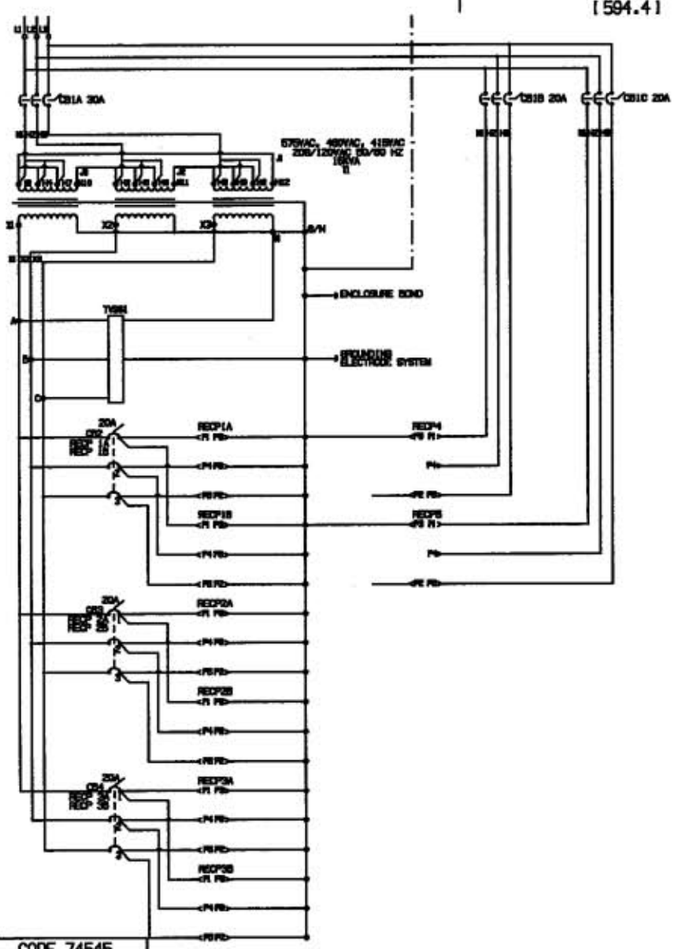

NOTES:
1. DIMENSIONS ARE IN INCHES & [MM].
2. ALL COMPONENTS ARE UL LISTED.
3. UNIT IS LISTED TO UL508A.
4. ENCLOSURE TYPE RATING: NEMA 1.
5. UNITS CAN BE STACKED TO A MAX. OF 2 UNITS.
6. LINKOSITY™ IS A TRADEMARK OF LOCKHEED MARTIN

CATALOG NUMBER

P * * * * * * * * * * * F 000

- CONSTANT VALUE "P"
- 1 KVA RATING
- 2 INPUT PHASE
- 3 INPUT VOLTAGE SYSTEM
- 4 OUTPUT VOLTAGE SYSTEM
- 5 MOUNTING
- FOR FUTURE USE

1 KVA Rating			
1	5	0	15

2 Input Phase	
C	Three

3 Input Voltage			
U	N	V	575/480/415

4 Output Voltage			
2	0	8	208/120 VAC 3PH

5 Mounting	
F	Floor

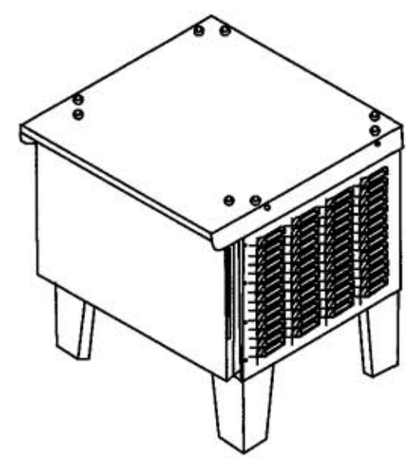

LIST OF PARTS

DESCRIPTION	MATERIAL	FINISH

SYM	REVISIONS	APP	DATE
2	10/6/06 IN NOTE 4: NEMA 1 WAS NEMA 3R IN TITLE ADDED 15 kVA PER DCN 13444 MJM	MJM TLS	10/6/06
1	RELEASED PER DCN 12049. MYA	RDK	10/22/04

THE DESIGN AND DIMENSIONS OF THE PRODUCT SHOWN ON THIS DRAWING ARE SUBJECT TO CHANGE WITHOUT NOTICE

TITLE
POWER SYSTEMS SUPPLY ASSY
(15 kVA PSSA)

TOLERANCES UNLESS OTHERWISE SPECIFIED
~~FRACTIONS ±1/64~~
~~DECIMALS ±.005~~
~~ANGLES ±2°~~

WIRING DEVICE-KELLEMS
HUBBELL INCORPORATED
BRIDGEPORT, CT

DR. BY MYA	APP. BY RDK
TR. BY	SCALE NONE
CHK'D BY RDK	DATE 10/22/04

DIMENSION SHEET FOR CAT. NO.

REPAIRABLE ☒ NON-REPAIRABLE ☐

B

M-9565

2