M-14315 | 1

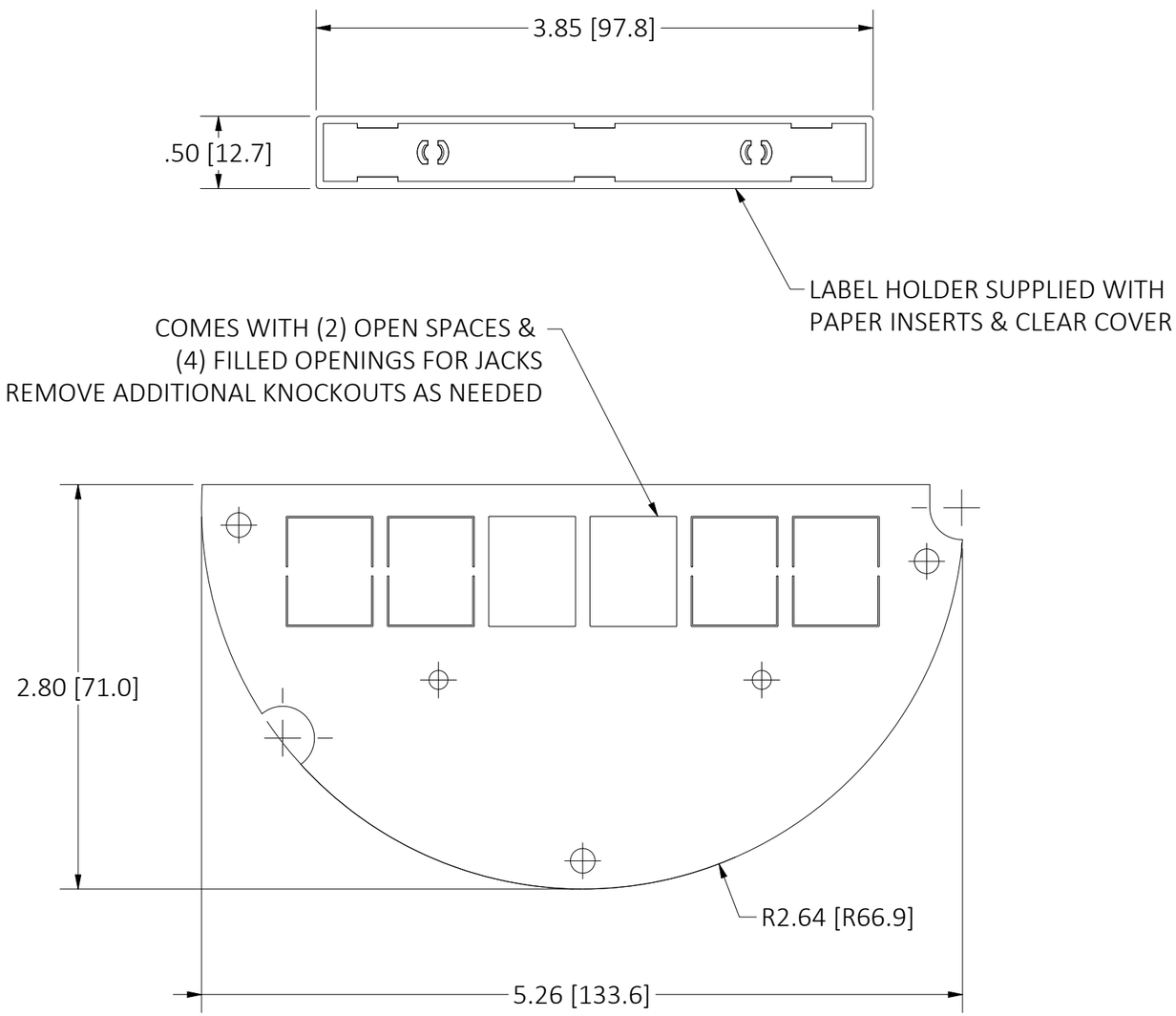

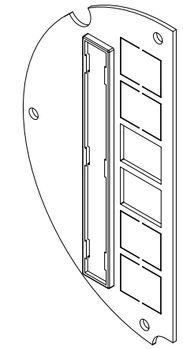

NOTES:
1. ALL DIMENSIONS ARE IN INCHES AND [MILLIMETERS].
2. COMPATIBLE WITH SIEMON MAX SERIES, AND ALL HUBBELL JACKS.
3. PRODUCT IS cULus LISTED.
4. MOUNTING HARDWARE INCLUDED.

LIST OF PARTS

DESCRIPTION	MATERIAL	FINISH
FACE PLATE	STEEL	WHITE
LABEL HOLDER	THERMOPLASTIC	BLACK
FASTENERS	STEEL	WHITE

REV	DESCRIPTION	APP	DATE
1	ORIGINAL RELEASE PER EC 210215004959	SBW	2/15/21

THE DESIGN AND DIMENSIONS OF THE PRODUCT SHOWN ON THIS DRAWING ARE SUBJECT TO CHANGE WITHOUT NOTICE. DIMENSIONS ARE IN INCHES [mm].

TITLE

S1R6 FRPT SUB-PLATE, 50/50 LEFT, FOR 2 - 6 DATA JACKS

WIRING DEVICE-KELLEMS
HUBBELL INCORPORATED
SHELTON, CT

TOLERANCES UNLESS OTHERWISE SPECIFIED
.XX = ± .01
.XXX= ± .005
ANGLE TOL. ±2°

DR. BY	SBW	SCALE	1 : 1
CHK. BY		DATE	12/4/2020

CAGE CODE 74545

DIMENSION SHEET FOR CAT. NO.
S1R6SP6DJ

B

M-14315

1