DRAWING NO. SE079584

CATALOG NUMBER	FIG. NO.	COMMERCIAL COPPER CABLE RANGE: COMPLETE CABLE RANGE	COMMERCIAL COPPER CABLE RANGE: SMALL GROOVE	COMMERCIAL COPPER CABLE RANGE: LARGE GROOVE	METRIC COPPER CABLE RANGE: COMPLETE CABLE RANGE	METRIC COPPER CABLE RANGE: SMALL GROOVE	METRIC COPPER CABLE RANGE: LARGE GROOVE	'B'	'H'	'J' DIA.	'L'	'T'	'W'
NAS29N	IB	6 SOL. (.162 DIA.) TO 250 kcmil (.575 DIA.)	6 SOL. (.162 DIA.) TO 1/0 STR. (.372 DIA.)	2/0 STR. (.420 DIA.) TO 250 kcmil (.575 DIA.)	10mm² (4.12mm DIA.) TO 120mm² (14.40mm DIA.)	10mm² (4.12mm DIA.) TO 50mm² (9.27mm DIA.)	70mm² (10.92mm DIA.) TO 120mm² (14.40mm DIA.)	2.38 [61]	1.80 [46]	3/8"-16	3.88 [99]	.25 [6]	2.00 [51]
NAS292N	ID										5.62 [143]		
NAH2934N	IE							2.62 [67]	2.12 [54]	1/2"-13	5.88 [149]		2.44 [62]
NAH292N	ID												
NAH2922N	IA												
NAS2934N	IE							2.38 [61]	1.80 [46]	3/8"-16	5.62 [143]		2.00 [51]
NAS34N	IC	1/0 SOL. (.325 DIA.) TO 500 kcmil (.813 DIA.)	1/0 SOL. (.325 DIA.) TO 4/0 STR. (.529 DIA.)	250 kcmil (.575 DIA.) TO 500 kcmil (.813 DIA.)	50mm² (9.27mm DIA.) TO 240mm² (20.35mm DIA.)	50mm² (9.27mm DIA.) TO 95mm² (12.80mm DIA.)	120mm² (14.40mm DIA.) TO 240mm² (20.35mm DIA.)	2.38 [61]	2.05 [52]	3/8"-16	4.12 [105]	.25 [6]	2.20 [56]
NAS342N	IA										5.62 [143]	.31 [8]	
NAH342N	IA							2.62 [67]	2.38 [61]	1/2"-13	5.88 [149]		2.56 [65]
NAS3434N	IE							2.38 [61]	2.05 [52]	3/8"-16	5.62 [143]	.25 [6]	2.20 [56]
NAH3434N	IE							2.62 [67]	2.38 [61]	1/2"-13	5.88 [149]		2.56 [65]
NAS402N	IA	2/0 STR. (.420 DIA.) TO 800 kcmil (1.031 DIA.)	2/0 STR. (.420 DIA.) TO 500 kcmil (.813 DIA.)	500 kcmil (.813 DIA.) TO 800 kcmil (1.031 DIA.)	70mm² (10.92mm DIA.) TO 400mm² (26.10mm DIA.)	70mm² (10.92mm DIA.) TO 240mm² (20.35mm DIA.)	240mm² (20.35mm DIA.) TO 400mm² (26.10mm DIA.)	2.62 [67]	2.30 [58]	3/8"-16	5.88 [149]	.38 [10]	2.44 [62]
NAH402N	IA								2.62 [67]	1/2"-13			2.81 [71]
NAS4034N	IE								2.30 [58]	3/8"-16		.31 [8]	2.44 [62]
NAH4034N	IE								2.62 [67]	1/2"-13			2.81 [71]
NAS4044N	I								2.30 [58]	3/8"-16	6.88 [175]		2.44 [62]
NAH4044N	I								2.62 [67]	1/2"-13			2.81 [71]

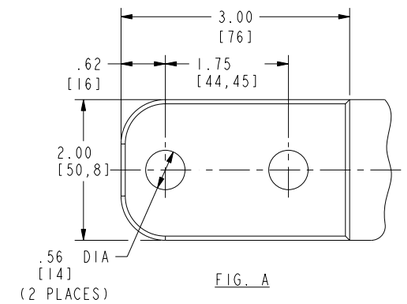

FIG. A

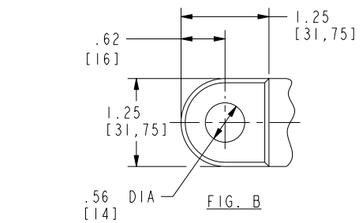

FIG. B

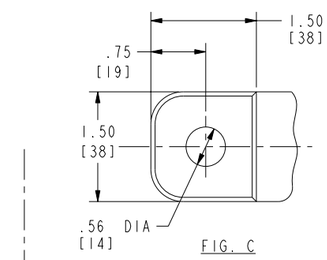

FIG. C

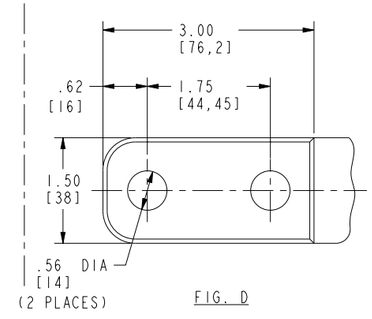

FIG. D

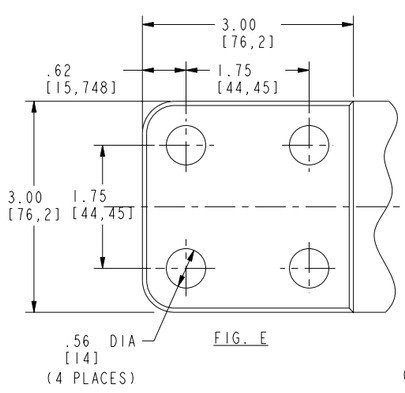

FIG. E

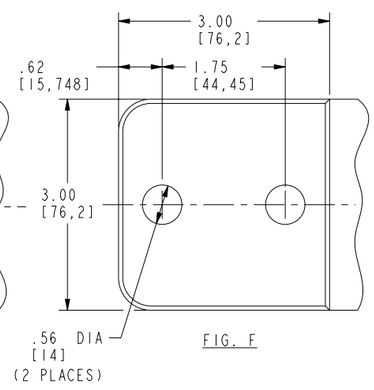

FIG. F

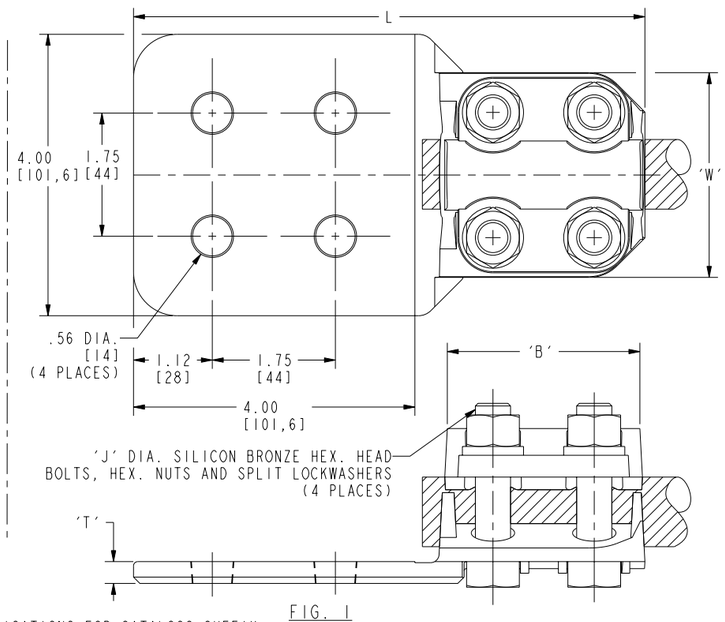

FIG. I

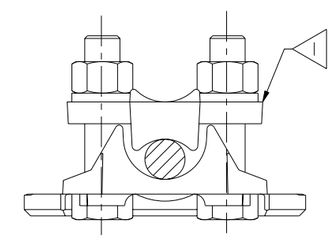

SMALL GROOVE

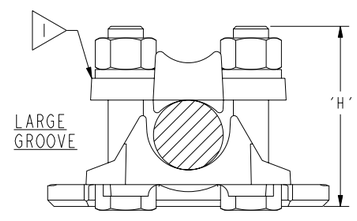

LARGE GROOVE

NOTES:

1. COMPLETE CABLE RANGE MAY BE ACCOMMODATED BY REVERSING CAP.

2. CATALOG NUMBER NAH4844NTMH2 INCLUDES THE NAH4844N TERMINAL SHOWN AND THE TMH2 KIT CONSISTS OF:
   (4) 1/2 X 1.75 LONG HEX. HEAD BOLTS
   (4) 1/2 HEX. NUTS
   (4) 1/2 SPLIT LOCK WASHERS

3. CATALOG NUMBER FOR THESE TERMINALS CAN BE ORDERED WITH ELECTRO-TIN PLATING BY ADDING THE SUFFIX 'W' AFTER THE CATALOG NUMBER I.E. NAH292NW

4. PLATING SPECIFICATIONS FOR CATALOGS SUFFIX :
   W = TIN PLATED BODY, CAP AND HARDWARE.
   TN = TIN PLATE BODY AND CAP ONLY. HARDWARE IS NOT PLATED.
   SV = SILVER PLATE BODY & CAP.
   CONTACT BURNDY LLC FOR OTHER PLATING OPTIONS.

5. MATERIAL: CAST COPPER ALLOY.
   (4) 1/2 FLAT WASHERS
   ALL HARDWARE IS SILICON BRONZE

REV	DATE	DESCRIPTION	ECO	BY	C'H'K.
C	05/21/2012 00:00:00 AM	ADDING PLATING OPTIONS NOTE	27587	MK	RL

TO ORDER BURNDY® PRODUCTS CALL

UNITED STATES
1-800-346-4175 (LONDONDERRY, NH)

CANADA:
1-800-361-6975 (QUEBEC)
1-800-387-6487 (ALL OTHER PROVINCES)

FOR PRODUCT INFO: http://www.burndy.com

TERMINAL

ITEM NO:	N/A	
CAT. NO:	NAS-N, NAH-N (TABLE)	
DRAWN BY:	AJM	12/02/83
CHECKER:	R LAVOIE	06/02/12
DSN APPVL:	R LAVOIE	06/02/12
MFG APPVL:	--	--
QA APPVL:	J HILLMAN	06/04/12
MKT APPVL:	B MICHAUD	06/07/12
PROD FAM:	SUBSTATION	
PROJECT #:	--	
DOCUMENT TYPE:	Sales	
REL LEVEL:	Released	

BURNDY®

SCALE: 1:1

SIZE	DRAWING NO	REV
D	SE079584	C
	SHEET 1 OF 2	

REV: PE0200

DRAWING NO. SE079584

CATALOG NUMBER	FIG. NO.	COMMERCIAL COPPER CABLE RANGE: COMPLETE CABLE RANGE	COMMERCIAL COPPER CABLE RANGE: SMALL GROOVE	COMMERCIAL COPPER CABLE RANGE: LARGE GROOVE	METRIC COPPER CABLE RANGE: COMPLETE CABLE RANGE	METRIC COPPER CABLE RANGE: SMALL GROOVE	METRIC COPPER CABLE RANGE: LARGE GROOVE	'B'	'H'	'J' DIA.	'L'	'T'	'W'
NAH442N	1A	4/0 STR. (.529 DIA.) TO 1000 kcmil (1.152 DIA.)	4/0 STR. (.529 DIA.) TO 750 kcmil (.998 DIA.)	750 kcmil (.998 DIA.) TO 1000 kcmil (1.152 DIA.)	95mm^2 (12.80mm DIA.) TO 500mm^2 (29.30mm DIA.)	95mm^2 (12.80mm DIA.) TO 400mm^2 (26.10mm DIA.)	400mm^2 (26.10mm DIA.) TO 500mm^2 (29.30mm DIA.)	2.88 [73]	2.62 [67]	1/2"-13	6.12 [155]	.44 [11]	2.88 [73]
NAH4434N	1E											.38 [10]	
NAH4444N	1										7.12 [181]	.31 [8]	
NAH462N	1A	1000 kcmil (1.152 DIA.) TO 1500 kcmil (1.442 DIA.)	---	1000 kcmil (1.152 DIA.) TO 1500 kcmil (1.442 DIA.)	500mm^2 (29.30mm DIA.) TO 800mm^2 (36.90mm DIA.)	---	500mm^2 (29.30mm DIA.)TO 800mm^2 (36.90mm DIA.)	3.06 [78]	2.88 [73]		6.31 [160]	.50 [13]	3.19 [81]
NAH4634N	1E											.41 [10]	
NAH4644N	1										7.31 [186]	.38 [10]	
NAH482N	1A	500 kcmil (.813 DIA.) TO 2000 kcmil (1.632 DIA.)	500 kcmil (.813 DIA.) TO 1500 kcmil (1.412 DIA.)	1500 kcmil (1.442 DIA.) TO 2000 kcmil (1.632 DIA.)	240mm^2 (20.35mm DIA.) TO 1000mm^2 (41.10mm DIA.)	240mm^2 (20.35mm DIA.) TO 800mm^2 (36.90mm DIA.)	800mm^2 (36.90mm DIA.) TO 1000mm^2 (41.10mm DIA.)	3.25 [83]	3.12 [79]		6.50 [165]	.69 [18]	3.38 [86]
NAH4834N	1E											.50 [13]	
NAH4844N	1										7.50 [191]	.44 [11]	
NAH48634N	1E	2000 kcmil (1.632 DIA.) TO 2500 kcmil (1.824 DIA.)	---	2000 kcmil (1.632 DIA.) TO 2500 kcmil (1.824 DIA.)	1000mm^2 (41.10mm DIA.) TO 1250mm^2 (46.30mm DIA.)	---	1000mm^2 (41.10mm DIA.) TO 1250mm^2 (46.30mm DIA.)	3.75 [95]	3.81 [97]	5/8"-11	7.12 [181]	.63 [16]	3.96 [101]
NAH4862N	1F												

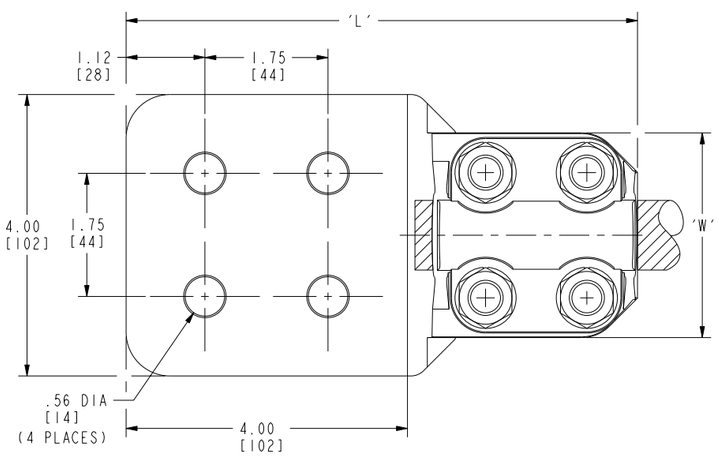

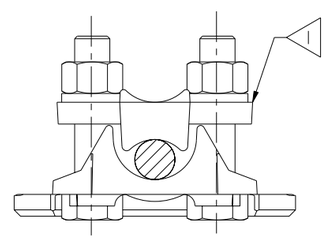

SMALL GROOVE

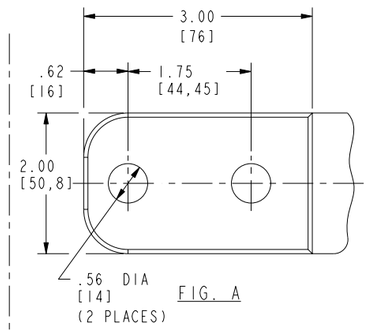

FIG. A

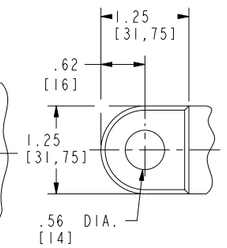

FIG. B

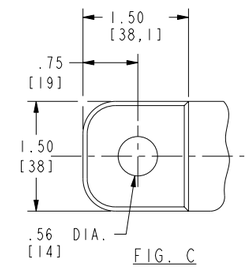

FIG. C

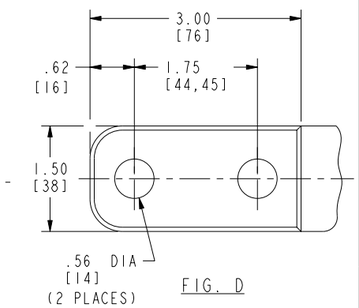

FIG. D

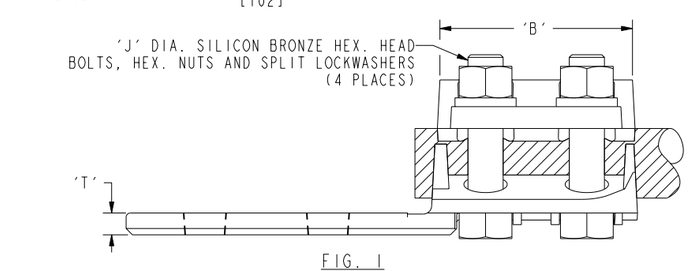

FIG. 1

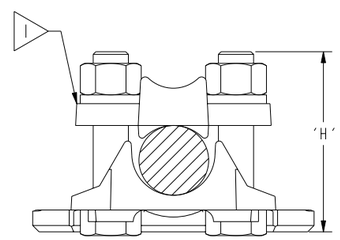

LARGE GROOVE

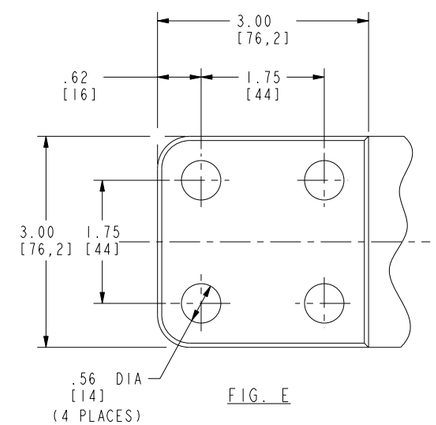

FIG. E

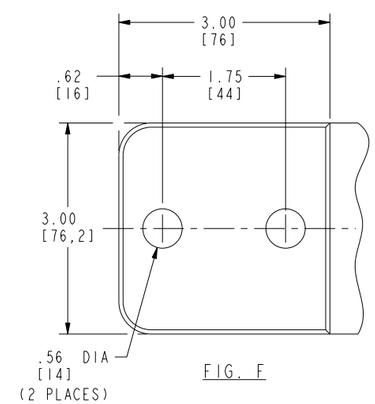

FIG. F

NOTES:

1. COMPLETE CABLE RANGE MAY BE ACCOMMODATED BY REVERSING CAP.
2. CATALOG NUMBER NAH4844NTMH2 INCLUDES THE NAH4844N TERMINAL SHOWN AND THE TMH2 KIT CONSISTS OF:
   (4) 1/2 X 1.75 LONG HEX. HEAD BOLTS
   (4) 1/2 HEX. NUTS
   (4) 1/2 SPLIT LOCK WASHERS
3. CATALOG NUMBER FOR THESE TERMINALS CAN BE ORDERED WITH ELECTRO-TIN PLATING BY ADDING THE SUFFIX 'W' AFTER THE CATALOG NUMBER I.E. NAH292NW
4. PLATING SPECIFICATIONS FOR CATALOGS SUFFIX :
   W = TIN PLATED BODY, CAP AND HARDWARE.
   TN = TIN PLATE BODY AND CAP ONLY. HARDWARE IS NOT PLATED.
   SV = SILVER PLATE BODY & CAP.
   CONTACT BURNDY LLC FOR OTHER PLATING OPTIONS.
5. MATERIAL: CAST COPPER ALLOY.
   (4) 1/2 FLAT WASHERS
   ALL HARDWARE IS SILICON BRONZE

REV	DATE	DESCRIPTION	ECO	BY	C'H'K.
C	05/21/2012 00:00:00 AM	ADDING PLATING OPTIONS NOTE	27587	MK	RL

TO ORDER BURNDY® PRODUCTS CALL

UNITED STATES
1-800-346-4175 (LONDONDERRY, NH)

CANADA:
1-800-361-6975 (QUEBEC)
1-800-387-6487 (ALL OTHER PROVINCES)

FOR PRODUCT INFO: http://www.burndy.com

TERMINAL

ITEM NO:	N/A	
CAT. NO:	NAS-N, NAH-N (TABLE)	
DRAWN BY:	AJM	12/02/83
CHECKER:	R LAVOIE	06/02/12
DSN APPVL:	R LAVOIE	06/02/12
MFG APPVL:	--	--
QA APPVL:	J HILLMAN	06/04/12
MKT APPVL:	B MICHAUD	06/07/12
PROD FAM:	SUBSTATION	
PROJECT #:	--	
DOCUMENT TYPE:	Sales	
REL LEVEL:	Released	

BURNDY

SCALE: 1:1

SIZE	DRAWING NO	REV
D	SE079584	C
	SHEET 2 OF 2	

REV: PE0200