DRAWING NO. SE211915

REV	DATE	DESCRIPTION	ECO	BY	C'H'K.
A	4/11/2008 12:00:00 AM	REDRAW INTO PRO-E & CATALOG NUMBER UPDATION.	16757	DG	BSK

CATALOG NO.	CONDUCTOR CODE (AWG)	CONDUCTOR NAVY ◁5	BOLT SIZE	FIG. NO.	DIMENSIONS B ±.06	C ±.04	E ±.02	H REF.	K DIA. ±.02	L ±.09	N ±.04	O.D. ±.01	T REF.	Y MIN.	INSTALLATION TOOLING (# CRIMPS) DIE INDEX	COLOR CODE	MECHANICAL RATCHET MD7-34R MD6	OUR840	Y2MR	HYDRAULIC Y34A ◁7	Y750 Y35, BAT35 Y39, BAT750	Y46 ◁4	Y45 ◁3	DIELESS (# CRIMPS)	WIRE STRIP LENGTH
YAZ2C2NTC38	#2 AWG [----]	60	3/8 [M10]	1	1.25 [32]	.60 [15]	1.75 [44]	----	.40 [10]	4.16 [106]	.41 [10]	.42 [11]	.11 [3]	2.18 [55]	10	BROWN	W2CVT W2CRT (2)	W2CVT W2CRT (2)	----	A2CR (2)	U2CRT (2)	U2CRT (2)	U2CRT (2)	MECHANICAL: MY29-11 (1) HYDRAULIC: Y644, Y644M Y644MBH, Y1000 Y1000BH (1)	1-5/16
YAZ2C2NTC3845				2				1.42 [36]		3.96 [101]															
YAZ2C2NTC3890				3				1.74 [44]		2.90 [74]															
YAZ2C2NTC			1/2 [M12]	1				----	.56 [14]	4.60 [117]	.62 [16]			2.40 [61]											
YAZ2C2NTC45				2				1.42 [36]		4.32 [110]															
YAZ2C2NTC90	#2 AWG [----]	60		3	1.25 [32]	.60 [15]	1.75 [44]	1.74 [44]		3.32 [84]		.42 [11]	.11 [3]		10	BROWN	W2CVT W2CRT (2)	W2CVT W2CRT (2)	----	A2CR (2)	U2CRT (2)	U2CRT (2)	U2CRT (2)		1-5/16

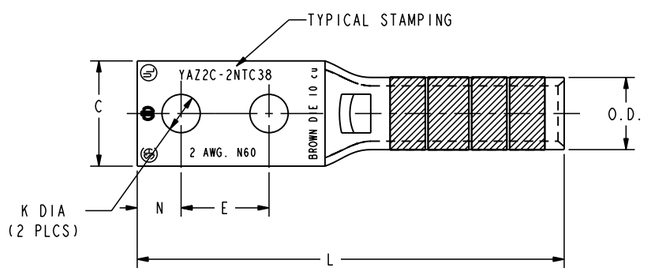

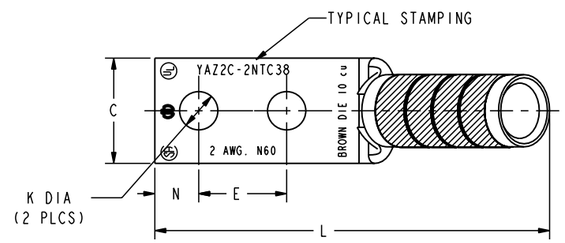

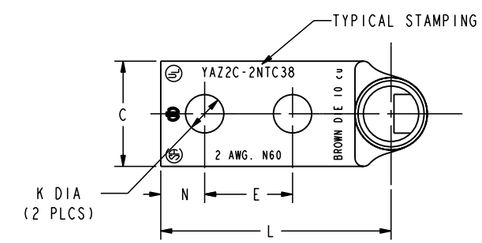

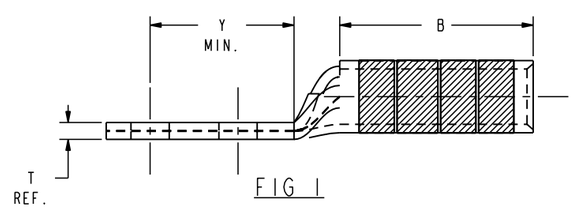

FIG 1

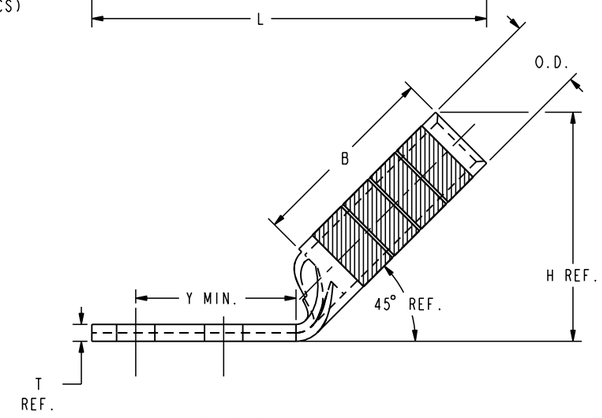

FIG 2

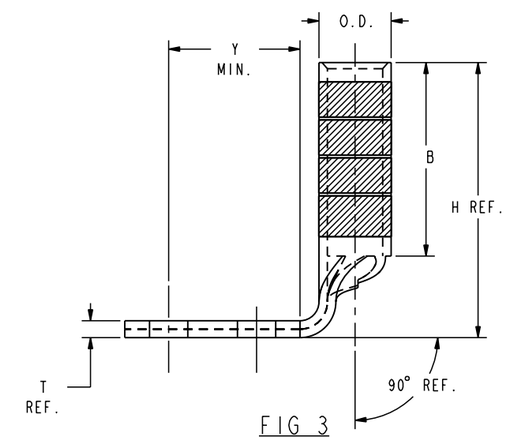

FIG 3

NOTES:

1. MATERIAL: COPPER TUBING.
2. FINISH: TIN PLATED
3. ◁ CATALOG # PT6515 ADAPTOR IS REQUIRED TO USE "U" DIES IN Y45 SERIES TOOLS.
4. ◁ CATALOG # PUADP-1 ADAPTOR IS REQUIRED TO USE "U" DIES IN Y46 SERIES TOOLS.
5. ◁ NAVY CABLE SIZE MAY BE OMITTED ON SOME SIZES BECAUSE OF SPACE LIMITATIONS.
6. DIMENSIONS, METRIC WIRE, & METRIC BOLT SIZES IN BRACKETS [ ] ARE IN MILLIMETERS. DIMENSIONS ARE ROUNDED OFF TO THE NEAREST MILLIMETER, UNLESS OTHERWISE NOTED, AND ARE FOR REFERENCE ONLY.
7. ◁ FOR USE BY CUSTOMERS THAT HAVE THIS HYPRESS™ NO NEW Y34A HYPRESS™ ARE BEING PROCESSED.

REV: PE0200

TO ORDER BURNDY® PRODUCTS CALL

UNITED STATES
1-800-346-4175 (LONDONDERRY, NH)

CANADA:
1-800-361-6975 (QUEBEC)
1-800-387-6487 (ALL OTHER PROVINCES)

FOR PRODUCT INFO: http://www.burndy.com

HYLUG™		
ITEM NO: N/A		
CAT. NO: YAZ2C-2NTC- (SEE TABLE)		
DRAWN BY: D.BOISVERT 11/12/98		
CHECKER: K.HENRY 12/03/98		
DSN APPVL: B.MACDONALD 12/02/98		
MFG APPVL: N/A --		
QA APPVL: S.GARY 11/30/98		
MKT APPVL: B.HARDGROVE 11/25/98	SCALE: 4:1	
PROD FAM: --	DRAWING NO	REV
PROJECT #: -- / SIZE	SE211915	A
DOCUMENT TYPE: Sales / D		
REL LEVEL: Released	SHEET 17 OF 36	

BURNDY