DRAWING NO. SE212273

REV	DATE	DESCRIPTION	ECO	BY	C'H'K.
B	1/1/2001 12:00:00 AM	REDRAW AND CATALOG NUMBER UPDATON OF SALES DRAWINGS	17057	BSB	BSK

CATALOG NO.	CONDUCTOR FLEX	CONDUCTOR CODE (AWG)	BOLT SIZE	FIG. NO.	B ±.06	C +.04 -.02	E ±.02	H REF.	K DIA. ±.02	L ±.09	N ±.03	O.D. ±.01	T REF.	Y MIN.	DIE INDEX	COLOR CODE	MECHANICAL MD7-34R	MECHANICAL OUR840	MECHANICAL Y2MR ◁5	HYDRAULIC BCT500 Y500CT	HYDRAULIC Y750 Y35, BAT35 Y39, BAT750	HYDRAULIC Y46 ◁4	HYDRAULIC Y45 ◁3	DIELESS (# CRIMPS)	WIRE STRIP LENGTH
YAZV4C2NTCFX	#4 WELD 91/24 105/24	#4 AWG	1/2 [M12]	1	1.25 [32]	.83 [21]	1.75 [44]	---	.56 [14]	4.62 [117]	.62 [16]	.38 [10]	.12 [3]	2.40 [61]	8 OR 346	GRAY	◁7 W4CVT X4CRT W4CRT (2)	◁7 W4CVT X4CRT (2)	GRAY (4)	◁7 W4CVT X4CRT W4CRT (2)	◁7 U4CRT (2)	◁7 U4CRT (2)	◁7 U4CRT (2)	MECHANICAL: MY29-11 (1) HYDRAULIC: Y644, Y644M Y644MBH, (1)	1-5/16
YAZV4C2NTCFX45				2				1.41 [36]		4.44 [113]															
YAZV4C2NTCFX90				3				1.79 [45]		4.07 [103]															

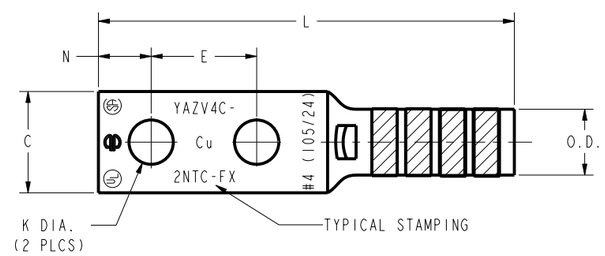

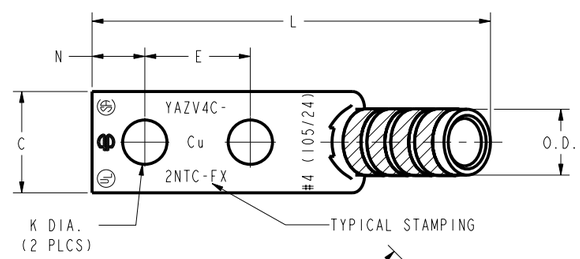

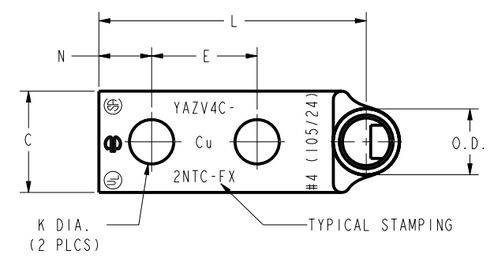

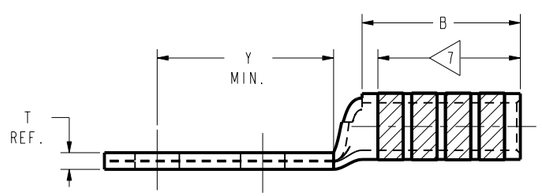

FIG. 1

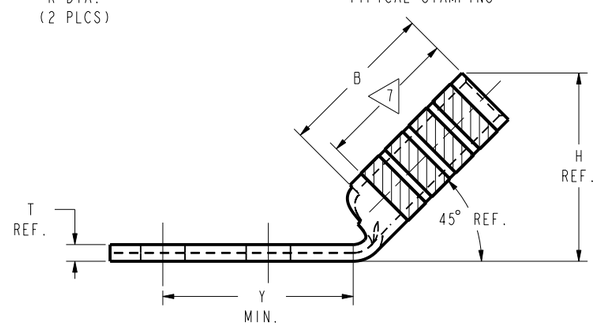

FIG. 2

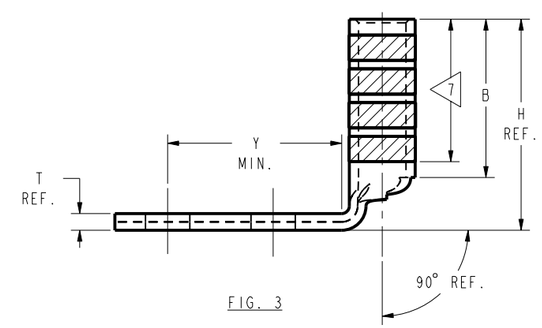

FIG. 3

NOTES:

1. MATERIAL: COPPER TUBING.
2. FINISH: TIN PLATED.
3. ◁3 CATALOG # PT6515 ADAPTOR IS REQUIRED TO USE "U" DIES IN Y45 SERIES TOOLS.
4. ◁4 CATALOG # PUADP-1 ADAPTOR IS REQUIRED TO USE "U" DIES IN Y46 SERIES TOOLS.
5. ◁5 PERMANENT DIE IN TOOLING.
6. DIMENSIONS IN BRACKETS [ ] ARE IN MILLIMETERS ROUNDED OFF TO THE NEAREST MILLIMETER, UNLESS OTHERWISE NOTED, AND ARE FOR REFERENCE ONLY.
7. ◁7 CRIMP (# OF CRIMPS PER TABLE) WITHIN THE LENGTH BETWEEN THE INK STAMPED CRIMPING AREA.

TO ORDER BURNDY® PRODUCTS CALL

UNITED STATES
1-800-346-4175 (LONDONDERRY, NH)

CANADA:
1-800-361-6975 (QUEBEC)
1-800-387-6487 (ALL OTHER PROVINCES)

FOR PRODUCT INFO: http://www.fciconnect.com

HYLUG™ (TWO HOLE FLEX)

ITEM NO:	N/A	
CAT. NO:	YAZV4C---	(TABLE)
DRAWN BY:	D BOISVERT	8/19/99
CHECKER:	K HENRY	8/26/00
DSN APPVL:	RR TEAM	9/28/00
MFG APPVL:	--	--
QA APPVL:	J BRODEUR	10/6/99
MKT APPVL:	R ROBICHEAU	10/5/99
PROD FAM:	--	
PROJECT #:	--	
DOCUMENT TYPE:	Sales	
REL LEVEL:	Released	

SIZE: D

DRAWING NO: SE212273 REV: B

SCALE: NTS

SHEET 11 OF 48

REV: PE0200