HUBBELL Control Solutions

DATE: | LOCATION:

TYPE: | PROJECT:

CATALOG #:

NXSW SERIES

SMART SWITCHES

NX DISTRIBUTED™ INTELLIGENCE

FEATURES

- Attractive, architecturally-pleasing decorator style design
- Gang-able with other decorator type devices
- Up to six buttons in a single gang
- Plug and play integration with NX SmartPORT™
- Low voltage device: 24 VDC
- Delivers simplified configuration and control of Hubbell Lighting luminaires using SpectraSync™ color tuning technology
- Five-year limited warranty

BUY AMERICAN SOLUTIONS
See Certification Specifications

CONTROL TECHNOLOGY

SpectraSync™ Color Tuning Technology

RELATED PRODUCTS

- NX Room Controller
- controlHUBB Mobile App
- NX Network Bridge Module
- NX Specialty Wall Stations
- NX CCT Wall Station
- NX Bluetooth® Radio Bridge

SPECIFICATIONS

CONSTRUCTION

- Housing - Rugged, high impact, injection molded plastic
- White, Ivory, Light Almond, Gray and Black color options available
- 1.6 oz (45.36 g)
- 4.2" L (106.68mm) x 1.6" W (40.64mm) x 1.4" D (35.65mm)

MOUNTING

- Switches may be mounted individually in a single gang switch box or ganged together in a multi-gang switch box
- Decorator-style wall plates available separately

ELECTRICAL

- Powered by NX SmartPORT using plenum rated Cat5 cables (ordered separately)
- Standby Power (W)
  - 120VAC: 0.1
  - 277VAC: 0.1
  - 347VAC: 0.1

OPERATING ENVIRONMENT

- Indoor use only
- Operating temperature: 32° to 104°F (0° to 40° C)
- Relative humidity (non-condensing): 0 to 95%

CERTIFICATIONS

- Patent(s) Pending

CERTIFICATIONS (CONTINUED)

- This product qualifies as both (i) a "domestic construction material" per FAR §52.225-9 Buy American-Construction Materials and a "(COTS) item" per FAR §2.101 and (ii) a "designated country construction material" per FAR 52.225-11 Buy American-Construction Materials under Trade Agreements effective 5/27/2020. See Buy American Solutions.
- This product qualifies as "designated country construction material" per FAR 52.225-11 Buy American-Construction Materials under Trade Agreements effective 5/27/2020. See Buy American Solutions.

WARRANTY

- 5 year limited
- See HCS Standard Warranty for additional information

ORDERING GUIDE

Example: NXSW-1-WH-U

CATALOG # _____

NXSW	–		–		–	
Model		**Switch Type**		**Color**		**BAA/TAA***
NXSW NX Smart Switch		**1** 1 Toggle Button		**Blank** White		**Blank** Standard Product
		2 2 Toggle Button		**IV** Ivory		**U** BAA
		3 3 Toggle Button		**LA** Light Almond		**T** TAA
		4 4 Toggle Button		**GY** Gray		
		6 6 Toggle Button		**BK** Black		

*Buy American Solutions	
BAA FAR §52.225-9	TAA FAR §52.225-11
NXSW-1-WH	
NXSW-2-WH	
NXSW-4-WH	
NXSW-6-WH	

© 2022 Hubbell Control Solutions, a division of Hubbell Lighting, Inc. Specifications subject to change without notice.
701 Millennium Blvd • Greenville, SC 29607 / Tel 864.678.1000 / hubbellcontrolsolutions.com

HUBBELL Lighting

HUBBELL Control Solutions

DATE: LOCATION:

TYPE: PROJECT:

CATALOG #:

NXSW SERIES

SMART SWITCHES

ORDERING GUIDE

CATALOG #

Model/Description	
CAT5-3IN-OR-PLENUM	CAT5 Cable for NX SmartPORT™ Devices, Plenum Rated, 3in, Orange
CAT5-3F-OR-PLENUM	CAT5 Cable for NX SmartPORT™ Devices, Plenum Rated, 3ft, Orange
CAT5-10F-OR-PLENUM	CAT5 Cable for NX SmartPORT™ Devices, Plenum Rated, 10ft, Orange
CAT5-25F-OR-PLENUM	CAT5 Cable for NX SmartPORT™ Devices, Plenum Rated, 25ft, Orange
CAT5-50F-OR-PLENUM	CAT5 Cable for NX SmartPORT™ Devices, Plenum Rated, 50ft, Orange
CAT5-100F-OR-PLENUM	CAT5 Cable for NX SmartPORT™ Devices, Plenum Rated, 100ft, Orange

Cat5 Cable

DIMENSIONS

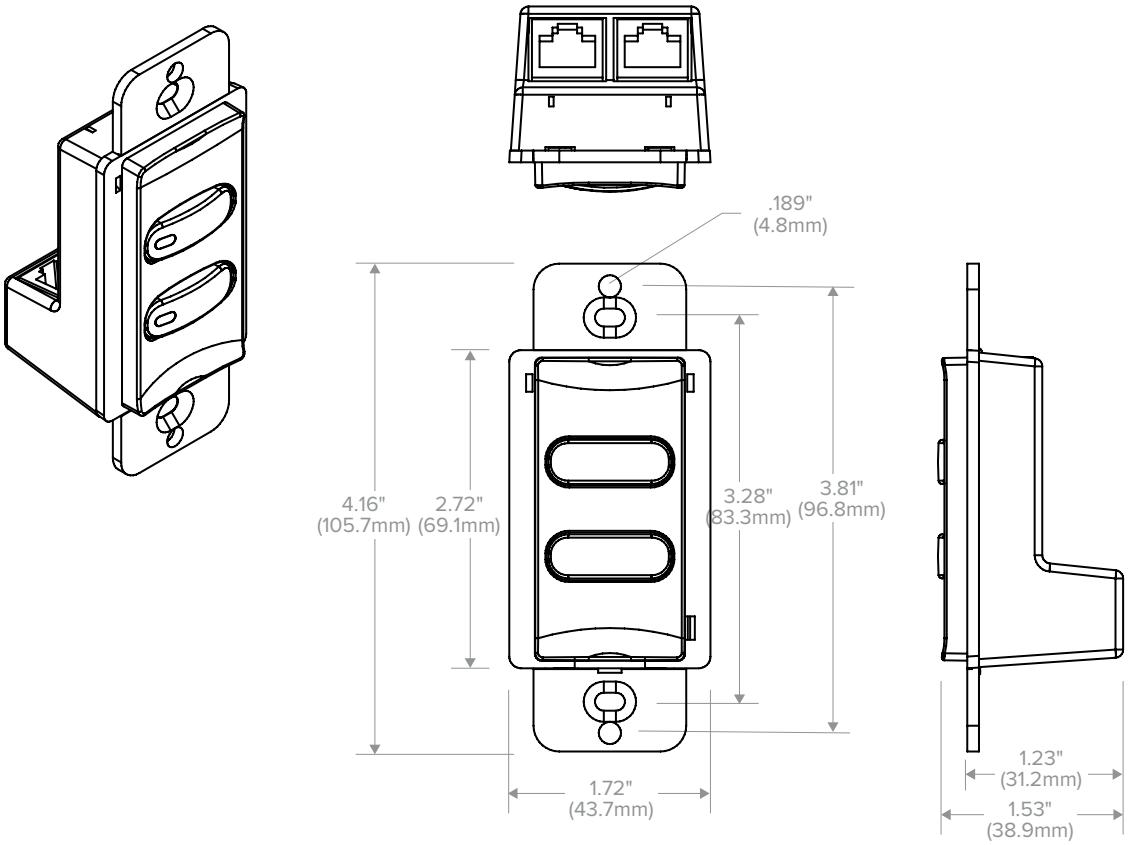

© 2022 Hubbell Control Solutions, a division of Hubbell Lighting, Inc. Specifications subject to change without notice.
701 Millennium Blvd • Greenville, SC 29607 / Tel 864.678.1000 / hubbellcontrolsolutions.com

HUBBELL Lighting

DATE: LOCATION:

TYPE: PROJECT:

CATALOG #:

NXSW SERIES

SMART SWITCHES

ADDITIONAL INFORMATION

Setup and Configuration

Models: NXSW-1, NXSW-2, NXSW-3, NXSW-4, NXSW-6

As shipped, all buttons on these stations are configured as Toggle type (press for on/press for off) with LED status. The buttons can be configured for alternate operation using the NX Device Setup App.

BUTTON TYPES	
Toggle	Sends group ON/group OFF, factory configuration
On	Sends group ON to full level, relay control is optional
Off	Sends group OFF to minimum level, relay control is optional
Single Button On/Off	Sends group ON to level/group OFF to level, relay control is optional
Raise	Raise dimming level
Lower	Lower dimming level
Preset	Activate a preset scene, 1 – 16
Timed On	Sends ON with selectable timeout to OFF
CCT On	Sends ON, level, and sets color
CCT Off	Sends OFF, level, and sets color
CCT Raise	Increase color temperature
CCT Lower	Lower color temperature
Partition	Sends room combine/separate message
On/Raise/Lower/Off	Touch for ON, hold for raise/lower, touch for OFF

NXSW-1

NXSW-2

NXSW-3

NXSW-4

NXSW-6

Wiring Diagrams

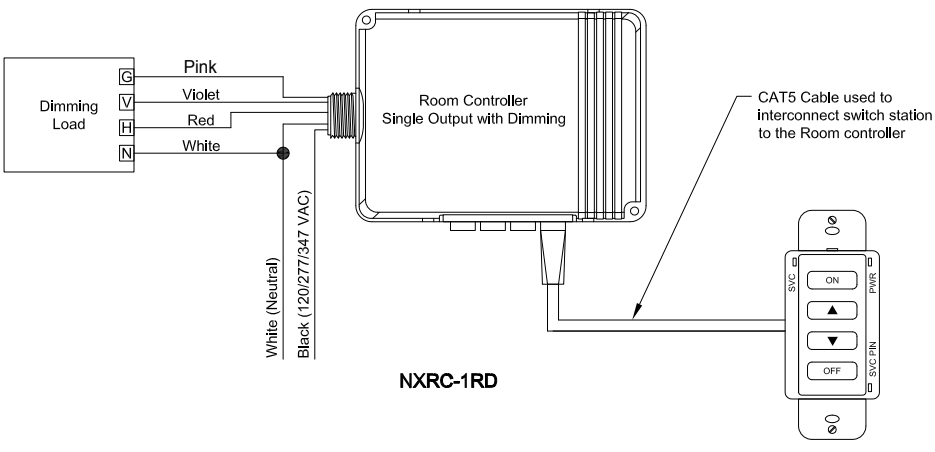

NXRC-1RD

NXSW-ORLO

Pink wire replace previous gray wire. Unites with a gray instead of pink wire should be wired as the pink wire shown in the diagram.

NXSW WALL STATION WITH NX ROOM CONTROLLER

© 2022 Hubbell Control Solutions, a division of Hubbell Lighting, Inc. Specifications subject to change without notice.
701 Millennium Blvd • Greenville, SC 29607 / Tel 864.678.1000 / hubbellcontrolsolutions.com

NXSW SERIES

SMART SWITCHES

ADDITIONAL INFORMATION (CONTINUED)

Wiring Diagrams

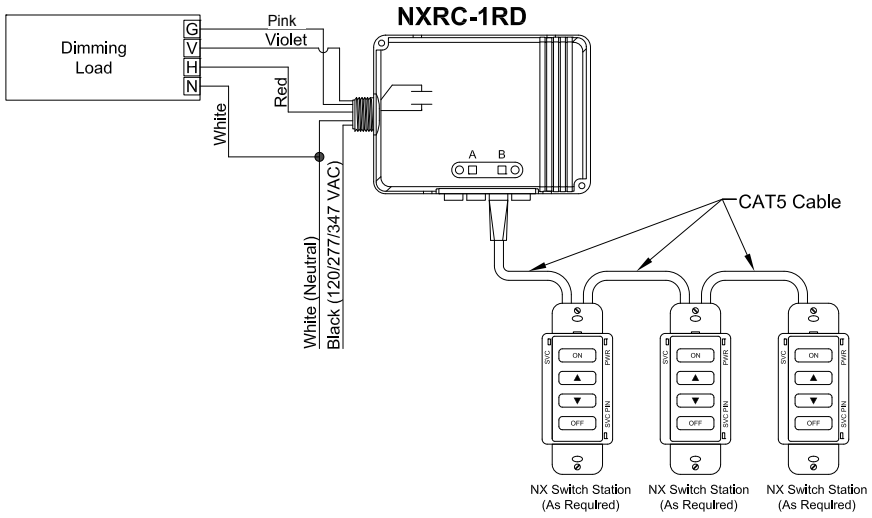

MULTIPLE NXSW WALL STATIONS DAISY CHAINED WITH NX ROOM CONTROLLER

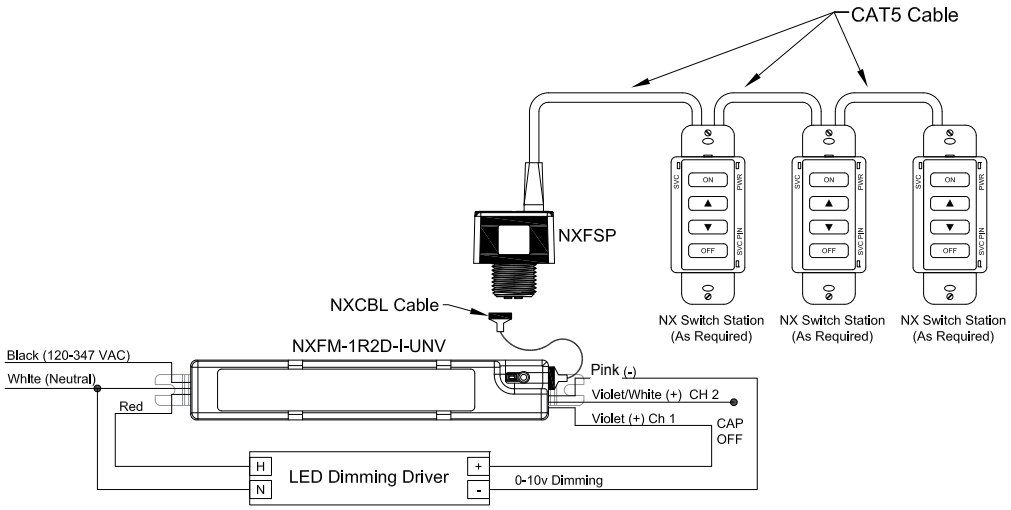

MULTIPLE NXSW WALL STATIONS DAISY CHAINED WITH NX ENABLED LUMINAIRE

Pink wire replace previous gray wire. Unites with a gray instead of pink wire should be wired as the pink wire shown in the diagram.

© All product and company names, logos and product identifiers are trademarks ™ or registered trademarks ® of Hubbell Lighting, Inc. or their respective owners. Use of them does not necessarily imply any affiliation with or endorsement by such respective owners.

© 2022 Hubbell Control Solutions, a division of Hubbell Lighting, Inc. Specifications subject to change without notice.
701 Millennium Blvd • Greenville, SC 29607 / Tel 864.678.1000 / hubbellcontrolsolutions.com