BRYANT®

Wallplates and Boxes, Weatherproof Covers, 1-Gang, Duplex Opening, Vertical, Gray

By Bryant
Catalog # RW51470

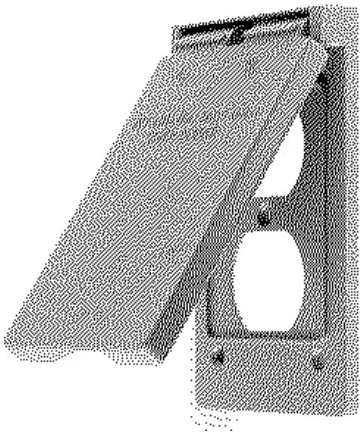

Wallplates and Boxes, Weatherproof Covers, 1-Gang, Duplex Opening, Vertical, Gray

Features

- 1-Gang
- Duplex Opening
- Vertical

Application

1) Duplex

General

Catalog Number	RW51470
Color	Gray
Construction	Cast
EU RoHS Indicator	No
Item Type	Weatherproofing Covers
Knockouts	None
Material - Mounting Hardware	Standard Box Mount- Mounting Screws
Number Of Outlets	1-Device
Number of Gang(s)	1-Gang
Specifications	• Gasket - Foam • Material - Zinc, painted gray • Mounting Screws - Zinc plated steel
Style	Vertical Mount Duplex
Type	Weatherproof Covers
UPC	883778119521

Dimensions

Display Size	1-Gang

Certifications And Compliance

Industry Standard(s)	UL Listed

Logistics

Carton Quantity	24
Pallet Quantity	4464

Product Assets

Catalog Page - WDK N-28 Catalog Page
Catalogs - WDK Catalog Full 2024
Catalogs - Bryant Full Line Catalog
Specifications - RW51470

©2024 Hubbell Incorporated. All rights reserved