# PVC SUPER FASTTAP® SADDLE PUNCH TEE FOR USE ON ALL PVC AND PE MAINS

By Continental Industries (CI)
Catalog # 516121071500

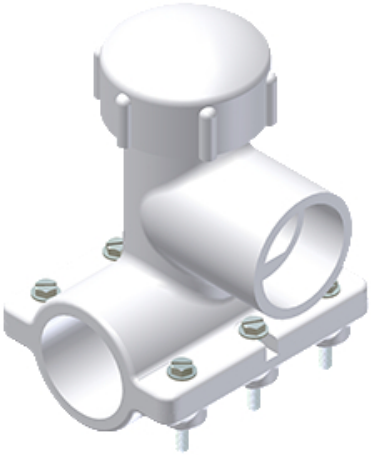

PVC SUPER FASTTAP®, 4IN IPS MAIN X 1 1/4IN IPS SOCKET, 1 1/2" CR PUNCH

## Features

- Full wrap around saddle design eliminates stress points being applied to main.
- Tapping process uses simple combination tapping tool eliminating cumbersome tapping machines.
- Tapping cutter retains the coupon then functions as a cut-off valve eliminating corporation stops.
- Manufactured from noncorrosive materials.
- PVC with PPI HDB Listing
- 316 Stainless Steel Bolts
- Available to work with 2”-6” iron pipe size mains.
- Available with 1 1/4” and 2” PVC, PE or PB
- Compression outlets and 1 1/4”, 1 1/2” & 2” PVC solvent-weld outlets.
- Application may be for wet or dry taps.
- See www.nsf.org for Continental’s NSF Listing to Standard 61.
- Reduces installation time by 50%.

## General

| | |
|---|---|
| Material | PVC |

## Product Assets

Installation Manuals - CONT-Manual-0000-34-4834-49-fasttap
Installation Manuals - CONT-Manual-super-fasttap



©2024 Hubbell Incorporated. All rights reserved