HUBBELL
Premise Wiring

Wallplates and Box Covers, Wallplate, Nylon, 1-Gang, Blank, Strap Mount, Gray

By Hubbell Premise Wiring
Catalog # NP14GY

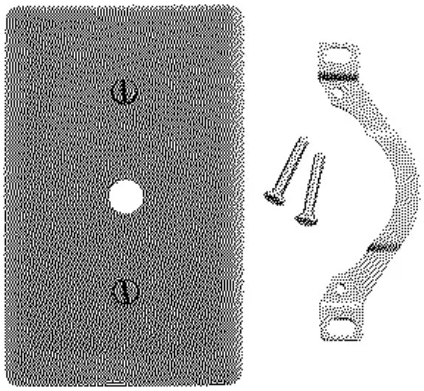

1-Gang Wallplate, Blank, Strap Mount

Application

Protection against contact of live terminals and wiring. Provides finished look to installation.

General

Catalog Number	NP14GY
Color	Gray
Construction	Molded
Cutout	Strap Mount Blank
EU RoHS Indicator	Yes
Item Type	Screw Mount
Material	Nylon
Material - Mounting Hardware	Screw Mounting
Number of Gang(s)	1-Gang
Orientation	Vertical Mount
Size	Standard
Specifications	• Height - 4.63" (117.6) • Material - Nylon • Mounting Screw - Steel (painted slotted screw head) • Size - 1-Gang • Thickness - .06 in. (1.5) • Width - 2.88" (73.2)
Style	Strap Mount
Type	Blank
UPC	883778103223

Dimensions

Display Size	Standard Sized
Thickness	0.06

Certifications And Compliance

Industry Standard(s)	UL Listed

Logistics

Carton Quantity	25

Product Assets

Specifications - NP14GY

©2024 Hubbell Incorporated. All rights reserved