NEXTSPEED

6-110 Connecting Block System

Field Termination Kit

Features

- Field Termination Kits Include Everything Needed to Assemble and Configure a Complete 6-110 Category 6 Cross Connect Field
- The Kit Includes Appropriate Number of 4-Pair Connecting Blocks and Port Identification Labeling

Ordering Information

Description	Color	Catalog Number	UPC
NEXTSPEED Category 6, 6-110 Field Termination Kit, 64-Pair, Without Standoff	White	**6110FTK64NL**	662620835754

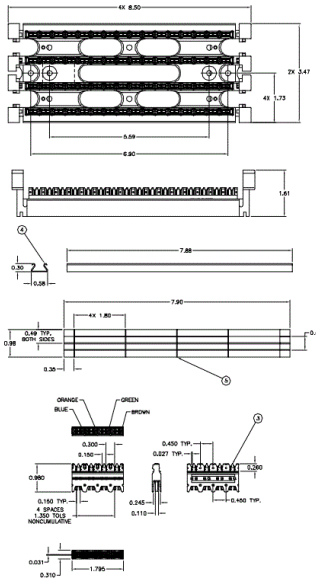

Listings

ANSI/TIA-568-C.2-10
IEEE 802.3an (PoE) and IEEE 802.3bt (PoE+)
Exceeds IEEE 802.3an 10GBASE-T link segment requirements
cUL Listed

Accessories

Connecting Block 6-110/4-Pair	**6110CB4PR12**
Laser-Printable Label Sheets	**XPL11010W**

Online Resources

eCatalog